EPLAN Data Standard

(English version)

Date: 01.06.2021

Based on EPLAN Version 2.9 SP1

Explanation for manufacturers

Since 2008, the EPLAN Data Portal has made component data from many manufacturers available in EPLAN format. When EPLAN Electric P8 was launched on the market, the basic idea was to provide the electrical macros for the individual components in order to reduce the effort involved in creating circuit diagrams with EPLAN Electric P8. Today, engineers use the EPLAN portfolio for more processes than just creating circuit diagrams. In particular, the modern switch cabinet production demands the requirements on component data. Detailed data such as 3D files, connection diagrams and drilling patterns are required for modern production processes. In addition, users of the EPLAN software want to carry out efficient engineering and automate recurring workflows. The EPLAN software can support these processes, but for this purpose customers require standardized data from different manufacturers.
In view of this situation, EPLAN is developing the EPLAN Data Standard for the Data Portal. It describes which data is to be provided in which form in the Data Portal. Components that meet the EPLAN Data Standard are easier to integrate into the planning and production process of EPLAN users, hence saving time and being cost effective..

Explanation for users

The EPLAN Data Portal has grown very successfully since 2008. Over 950,000 component data in EPLAN format from over 304 manufacturers can be found here. At the same time, the importance of component data in engineering and manufacturing processes has also increased. Enclosures are planned in 3D and mounting plates are processed automatically by machines. As a result, many new requirements for component data are being imposed on manufacturers.

EPLAN is developing the EPLAN Data Standard to channel these requirements and provide both manufacturers and users with a basis for creating and using component data. It describes which data fields can expect a user when downloading components from the Data Portal.
This should reduce the maintenance effort for article data at the user and increase the manageability of the data for automated processes.

The EPLAN Data Standard is not a seal of approval for the correctness of the content of the data. Contents are provided by the manufacturers with great care. Every user feedback contributes to further improving data quality.

Notes on the readability of the EPLAN Data Standard document

The following document describes the requirements for component data. The headings are based on the properties of EPLAN parts management. Headings marked with the EPLAN Data Standard logo ( ) are mandatory fields in the standard and must be filled in. However, these may vary from product subgroup to product subgroup. The exact definition of the individual properties of the respective product subgroups can be found in the supplementary document "EPLAN Data Standard – Product group overview". Data records that comply with the EPLAN Data Standard are marked with the logo in the EPLAN Data Portal and thus are immediately recognized by the user.

Index

Release notes 5
Changelog No. 4 6
General definitions 7
Creation of macros – General rules 12
Record type: Manufacturer / Supplier 13
Record type: Part 15
Record type: Drilling pattern 28
Record type: Connection point pattern 29
Record type: Accessory placement 42
Specific data fields for Terminals 43
Specific data fields for Cables 53
Specific data fields for Relays, contactors 59
Specific data fields for Protection devices 64
Specific data fields for Connections 67
Specific data fields for Plugs 71
Specific data fields for Enclosure 76
Specific data fields for Cable ducts 79
Specific data fields for PLC 82
Specific data fields for Fluid Power 94
Specific data fields for Housing 96
Specific data fields for Housing accessories, internal extension 98
Specific data fields for Busbars 100

Release notes

No.	Modification	Content	Date	Editor
1	Initial version	Release Candidate	20.11.2019	Gianluca Coppini
2	Update	See changelog	15.05.2020	Rouven Münch
3	Update	See changelog	07.09.2020	Rouven Münch
4	Update	See changelog	01.06.2021	Saber Katiraei Sebastian Niederreiter

Changelog No. 4

Chapter	Change
Length-variable items	Newly added
Tab: User-defined properties	More detailled description
Tab: Assembly	Newly added
Tab: Documents	Definition is changed
Terminals – How to do	More detailled description
Specific data fields for Cables	Note for Function definition for prefabricated cables
Specific data fields for Mounting rail	This chapter is removed and definitios for Mounting rail are added in the chapter Specific data fields for Housing accessories, internal extension
Specific Data fields for Fluid	More detailled description
Specific data fields for Housing	Newly added
Specific data fields for Housing accessories, internal extension	Newly added
Specific data fields for Busbars	Newly added
Excel table: Product group overview	Newly added product groups: Housing Housing accessories, external Housing accessories, internal Busbars Hook-up Lock systems Fluid power: Filters Fluid power: Fluid control terminal Fluid power: Power units and plants Fluid power: Pumps Fluid power: Sensors Fluid power: Sub-plates Modified tab: Cables

Note:

With this document, all previous documents of the EPLAN Data Standard are obsolete and only the information provided here is valid if it differs from the previous version.

General definitions

Formatting

In the case of textual information, attention must be paid to the typical uppercase and lowercase languages of the respective national language. Only upper or lowercase letters are not allowed. Exceptions are the specification of proper names (EPLAN, ALPHA, etc.)

Multilingual fields

In the case of multilingual fields, at least the specification of the English language in the language identifier en_US is mandatory. Make sure that the American dialect is used. Further languages can be added optionally. Make sure that the corresponding languages are also filled in each multilingual property that is used.

Exceptions are articles which are exclusively intended for a certain market and are only available there (e.g. China), in that case the corresponding language is sufficient.

Care must be taken to include the corresponding national language in the respective linguistic identifiers. A language other than that of the corresponding linguistic identifier is not permitted.

The language-neutral language identifier (??_??) may not be used.

Multilingual fields are marked by the following character in the heading.

- ✔ de_DE → German text
- ✔ en_US → English text
- ✘ fr_FR → English text
- ✘ ??_?? → Any text

Path specifications: creation of the folder structure and file names / references

If references to files are specified (e.g. for documentations, macros or images), a fixed path (C:\folder\...) is not permitted. You have to pay attention to use the path variable, like e.g. $(MD_MACROS). In addition, the respective manufacturer-related subfolder structure must be defined with the full name from the settings on the tab page: set in Manufacturer / Supplier (e.g. $(MD_MACROS)\<Manufacturer:Full Name>\...)

A total length of 240 characters must not be exceeded.

Generally, the nomenclature of file names and references (connection point patterns, drilling patterns, etc.) is not explicitly required. However, these should be plain text name used in the English language.

Specification of physical quantities

The specification of physical quantities is carried out according to standard EN ISO 80000-1 and DIN 1301-1. This means that the unit character follows the numeric value after a distance, usually the space. Exceptions are the following unit signs, which immediately follow the numerical value: °, ‘, ‘‘(Angle units such as degrees, minutes, seconds, etc...). Unit characters, which also contain a degree character (e.g. °C), are indicated by spaces.
Physical quantities are always indicated with a unit.

Make sure that there is no line break between number and unit.

10 V
10-100 kV
300/500 V
0,5 mA
5°
20 °C
G 1/4“
G 2 1/2“

Length-variable items

Definitions in this chapter only apply to parts from the "Mechanics" generic product group but not for parts with length specifications (for example cables, connections, lines / conduits, hoses).

A length-variable item in EPLAN refers to those items that can be cut into several lengths after it's been manufactured such as Mounting rails, Busbar rails, Cable ducts, etc.

From this point of view, you must not define the two following parts as length-variable items in EPLAN software for instance:

Rittal Cable Clamp C rail (DK 7016.140)

Rittal Cable Clamp T-head rail (DK 7016.150)

For the purpose of placing length-variable items in the 3D mounting layout properly, you should pay attention to the following properties in EPLAN Parts management.

EDS.Part.LengthVariableItem

This checkbox must be activated. This property can be found in the User-defined properties tab. Pay attention to the chapter “Record type: Part > Tab: User-defined properties”.

Delivery length <22058>

Enter the value of the delivery length in this field. Depending on the product group and product subgroup, this property can be found in the Properties tab.

The length definition can be limited with the delivery length during placement of the item. The drawing of the item is limited to the delivery length. If no delivery length has been given, the item can be drawn infinitely long.

In EPLAN a check run can examine if items have a length greater than the delivery length.

The following properties can be found in the Mounting data tab.

Weight <22046>

For length-variable items this field must not be filled.

Dimensions

If an outline extrusion (.fc2) is not stored in the Graphical macro field, dimension fields must be completed only for Cable ducts, Busbar rails and Mounting rails as described below. EPLAN Pro Panel uses the dimension values to shape a standard form of the below items in the 3D mounting layout.

Cable ducts

Width <22013> and Depth <22014> must be filled, but Height <22012> must not be filled.

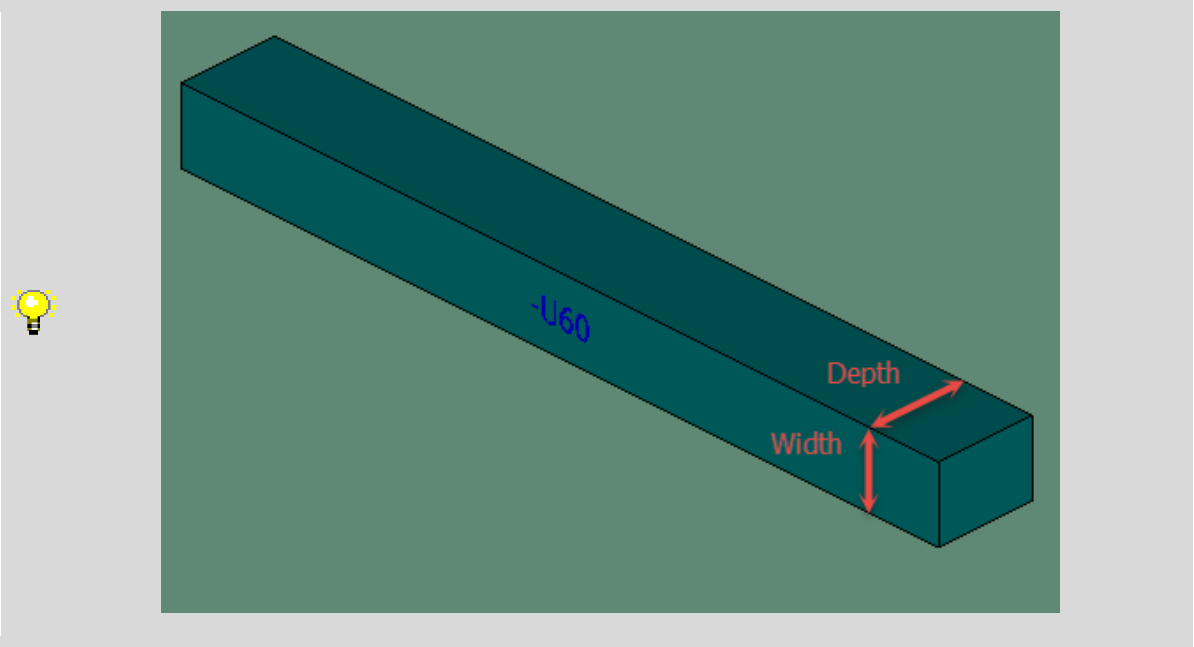

Busbar rails

Width <22013> and Depth <22014> must be filled, but Height <22012> must not be filled.

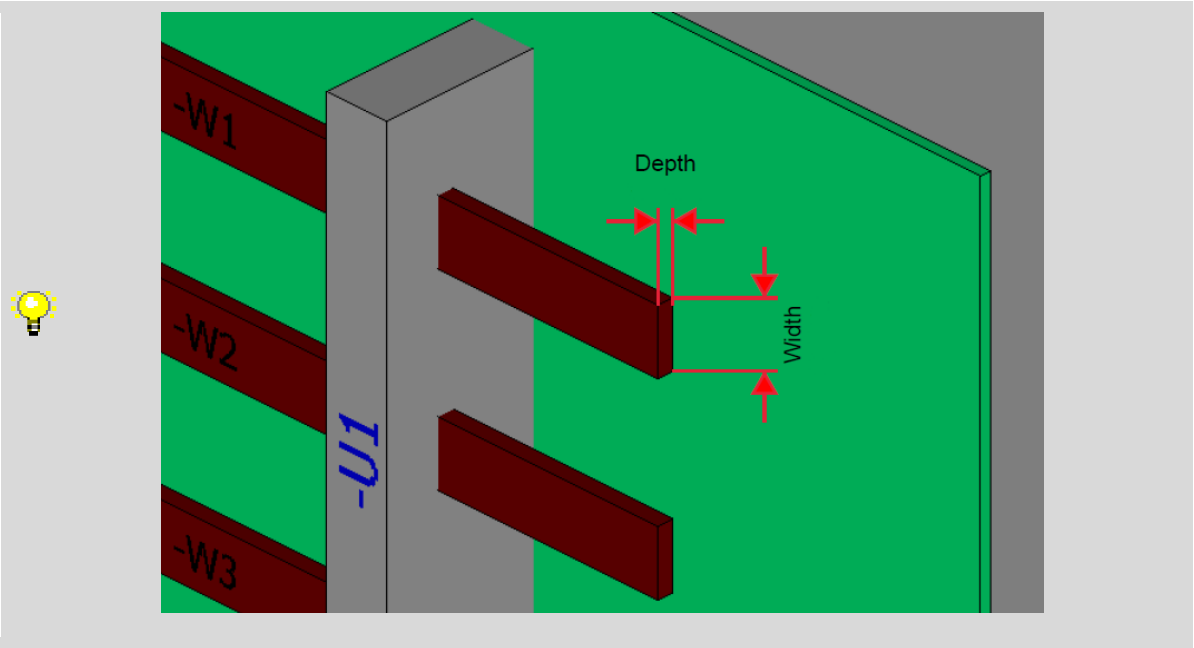

Mounting rails

Height <22012>, Width top <22198> and Width bottom <22199> must be filled, but Width <22013> and Depth <22014> must not be filled.

Width top <22198> and Width bottom <22199> properties are available only for Mounting rail product subgroup and can be found in the Properties tab.

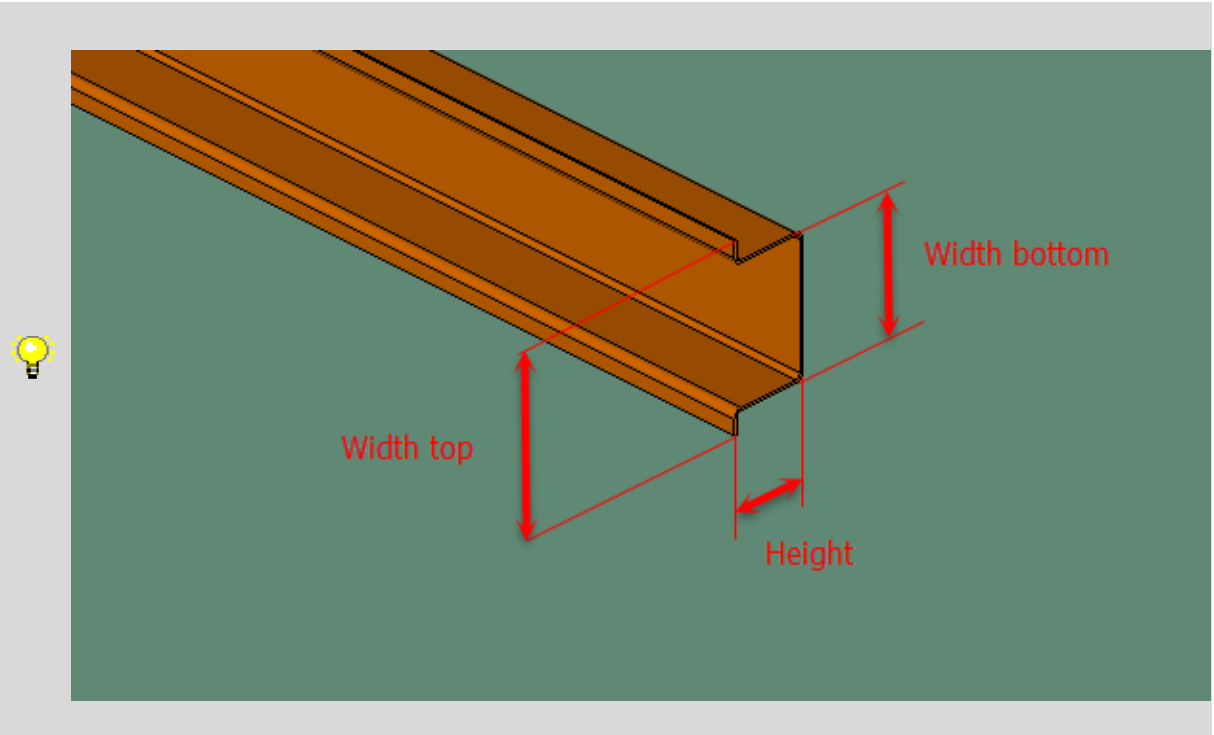

Graphical macro <22018>

For length-variable items if the dimension values are not used to shape a standard form of the above items, an outline extrusion (.fc2) must be stored in this field. When defining an outline, the dimension values are then no longer considered.

Detailed information about outline extrusions can be found in EPLAN Online Help page.

Creation of macros – General rules

Some articles need a representation in the circuit diagram that exceed the simple symbolics. This means that a macro is needed. In the specific chapters, the EPLAN Data Standard describes which display types and variants are necessary for the individual product groups. Here the general valid requirements are described, which are valid for all macro display types in this document. It is described in the sepcific chapters if there are necessary exceptions. In the downloadable macro project „[EDS] Macroproject 2020_09_07“ the described templates and settings can be viewed and taken from.

Macro

Care must be taken for the provision of the article macros. The macro has to be grouped with the macro box and the elements have to be on the appropiate grid. The use of self-created or imported layers is not allowed. The format settings of the elements have to be set to come "from layer". This guarantees the changeability of values (e.g. Size and Color) from within the layer management and to always suffice for the target project. Provided macros have to be created as window macro (.ema). Macros, which are created with a special function template, build an exception. These macros have to be necessarily saved as symbol macros (.ems)

Macro-Box

The macro box has to be fitted to the size of the actual macro. For the final macro this means, the macro box must not be bigger than 4mm. An eventual macro created for the panel layout builds an exception. For this macro the macro box has to be exactly on top of the part placement box without any distance.

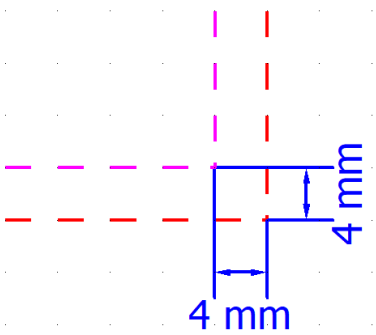

Figure 1 Distance of the Macro-Box

Furthermore there are standardized property arrangements required which must be used unchanged for all macro boxes and are provided in the mentioned macro project.

Record type: Manufacturer / Supplier

Tab: Address

Short name <22007>

The short name corresponds to the manufacturer's abbreviation.

This is specified by EPLAN and can be requested from EPLAN if it does not already exist. The existing abbreviations can be viewed under the link below.

https://www.eplanusa.com/fileadmin/cloud/public/edp/Manufacturer_in_EDP.pdf

→ Current manufacturer

Full name <22222>

The company name must be entered here without any legal additions. The full name is displayed as the manufacturer in the EPLAN Data Portal.

> Instead of
> EPLAN GmbH & Co. KG
> just apply “EPLAN”

Title

Optional.

Name 1

Optional.

Here you have to enter the official company name, including legal additions.

> EPLAN GmbH & Co. KG

Name 2

Optional.

Name 3

Optional.

Street

Optional.

Enter here the street and house number of the official company headquarters.

Zip code / City

Optional.

Enter the postcode of the official company headquarters here, without additional country code.

> 40789 Monheim am Rhein

Zip code / P.O. box:
Optional.

If available, enter the postal code of the company's official mailbox here, without additional country code.

Country
Optional.

Here you have to enter in English the country where the official company headquarters is.

Germany

Phone
Optional.

Enter here the official telephone number of the company's registered office.

Example nationale telephone number:

01234 5678-910

Example international telephone number with country calling code:

+ 49 1234 5678-910

Fax
Optional.

Enter here the official number of the fax of the head office.

If you fill in this field, please note the requirements from the previous point phone

E-Mail
Optional.

Enter here the official e-mail address of the company headquarters.

Customer Number
Is reserved for the end user and must not be filled.

Description
Optional.

Pay attention to the definition in the chapter “General definition> Multilingual fields”.

Record type: Part

Tab: General

Generic product group <22138> / Product group <22041> / Product subgroup <22028>

The part is to be classified in a meaningful and correct product group category. This classification is very important, because on the basis of the selected product group certain properties in the parts management or certain functions are therefore also available in the platform.

Trade / subtrade

The correct trade must be selected for the part. An additional substructure is only permitted in the Fluid power trade.

Part number <22001>

In order to guarantee the uniqueness of the part number among all component manufacturers, this should correspond to the following structure:

<Manufacturer: Short name>.<Order number>

Manufacturer RITTAL → <Manufacturer: Short name > RIT
Order number: 8004000
Part number: RIT.8004000

Discontinued part

Is reserved for the end user and must not be filled.

ERP-Number

Is reserved for the end user and must not be filled.

Type number <22002>

The type number of the part must be entered here, this should correspond to the information in the manufacturer's catalogue. If there is no explicit type number, the order number must be entered.

Designation 1 <22004>

A short, concise description of the part has to be entered in the Designation 1 field. For the selection, the fourth level of the eCl@ss categorization is recommended.

The length must not exceed 70 characters.

The additional specification of technical parameters should be avoided.

Pay attention to the definition in the chapter "General definition> Multilingual fields". Mehrsprachige Felder

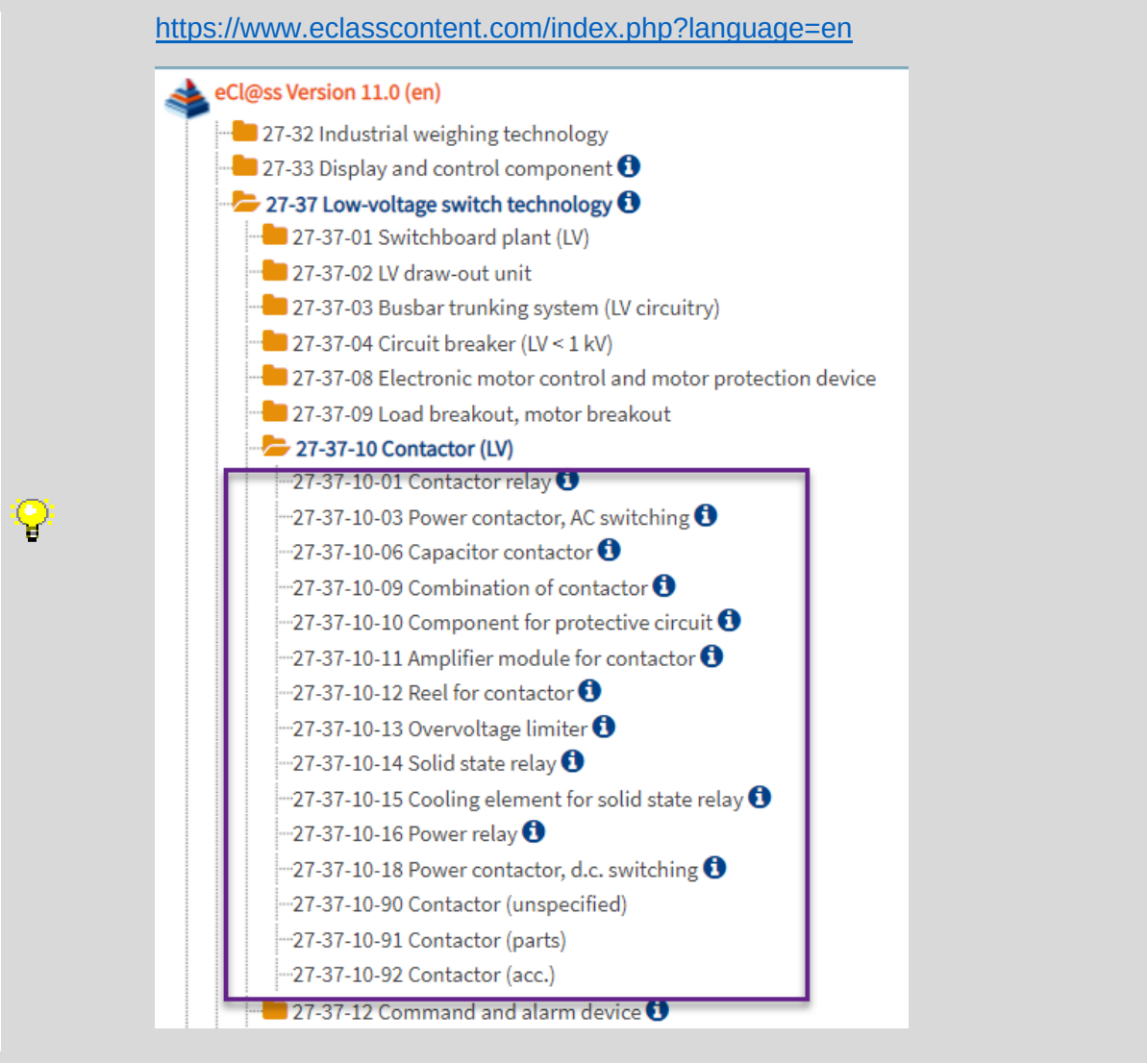

Designation 2

Optional.

Pay attention to the definition in the chapter "General definition> Multilingual fields".

Designation 3

Is reserved for the end user and must not be filled.

Manufacturer <22007>

Here you can enter the short name from the specifications under Tab: Manufacturer.

Supplier

Is reserved for the end user and must not be filled.

Order number <22003>

Here the order number of the part is to be entered, this should correspond to the data of the manufacturer catalogue.

Description

Optional.

Here an additional detailed description of the part can be deposited. This field is included in the full-text search (Portal + Platform).

Pay attention to the definition in the chapter "General definition> Multilingual fields". Mehrsprachige Felder

Tab: Prices / Others

Price unit

Is reserved for the end user and should be set to "0”.

Quantity unit <22042>

The unit of measure is to be filled in either "piece" or "meter", depending on how it is ordered. Abbreviations are not allowed.

Pay attention to the definition in the chapter “General definition> Multilingual fields”. Mehrsprachige Felder

Examples for translation:

de_DE	Stück	Meter
en_US	piece	meter
en_EN	piece	metre
cs_CZ	kus	metr
da_DK	styk	meter
es_ES	pieza	metro
fr_FR	pièce	mètre
hu_HU	darab	méter
it_IT	pezzo	metro
ja_JP	個	メートル
ko_KR	번호	미터
nl_NL	stuk	meter
pl_PL	sztuka	metr
pt_BR	peça	metro
pt_PT	peça	metro
ru_RU	на изделие	метр
sv_SE	styck	meter
tr_TR	adet	metre
zh_CN	件	米

Quantity / packaging

Optional.

Enter the number of units contained in a packaging unit.

Discount

Is reserved for the end user and should be set to "0,00 %”.

Purchase price/ price unit

Is reserved for the end user and should be set to "0,00”.

Purchase price/ packaging

Is reserved for the end user and should be set to "0,00”.

Sales price

Is reserved for the end user and should be set to "0,00”.

Barcode number / type
Optional.

If available, enter the GTIN code here.

Certification (General, UL certification, VDE certification, ATEX identifier, CE certification)
Optional.

If a certification is available, it should be registered here. The corresponding numbers must be listed separately by semicolon if necessary.

Tab: User-defined properties

The following properties (so-called EDS-defined properties) are available only for EPLAN parts data providers on EPLAN Data Portal and must be filled if applicable.

Call the “Configure properties” dialog from **Parts management > Extras > Configure properties** to import the EDS-defined properties (PcPm.EDS.xml) into your EPLAN Parts database, then call the below dialog to import the EDS scheme (PMcs.EDS.xml) into the User-defined properties tab.

The above xml files are provided in the EDS documentation package.

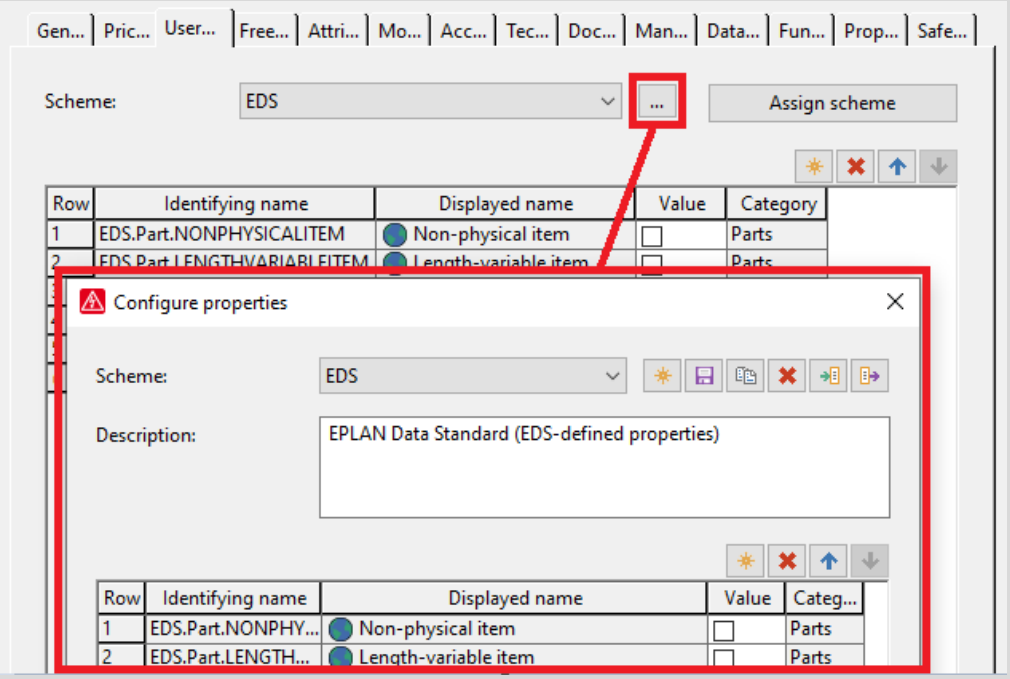

EDS.Part.NonPhysicalItem

This property is a boolean field type to specify that the part is not a physical item (for example licenses, software, etc.).

EDS.Part.LengthVariableItem

This property is a boolean field type to specify that the part is a length-variable item, except parts with length specifications (for example cables, connections, lines / conduits, hoses). Pay attention to the chapter "General definitions > Length-variable items".

EDS.Part.ItemNeedsDrill

This property is a boolean field type to specify that the item requires holes in mounting surface, at least for one mounting variant of the item.

EDS.Part.AuxiliaryPart

This property is a boolean field type to specify that the part has a dummy part number in EPLAN and cannot be ordered separately because it's not listed in the manufacturer's catalogue.

The purpose of creating such parts in EPLAN is to build up an assembly part that is to be placed in the 3D mounting layout in a distributed manner (e.g., main switch distributed to panel and door). Set this checkbox to make this type of parts invisible in EPLAN Data Portal. Pay attention to the chapter "Record type: Part > Tab: Assembly".

Tab: Free properties

The free properties are generally reserved for the user and are therefore not to be filled.

Tab: Attributes

Is reserved for the end user and must not be filled.

Tab: Mounting data

Weight <22046>

Enter the net weight of the part without packaging in kilograms (kg). This field is used for the weight calculation of the control cabinet.

Width <22013>

Enter here the device-specific width in mm.

Height <22012>

Enter here the device-specific height in mm.

Depth <22014>

Enter here the device-specific depth in mm.

When determining the width / height / depth, the device-specific installation position of the device must be assumed in the control cabinet and the dimensions of an imaginary cuboid body taken from the frontal view.

For mechanical components, please refer to the separate chapters.

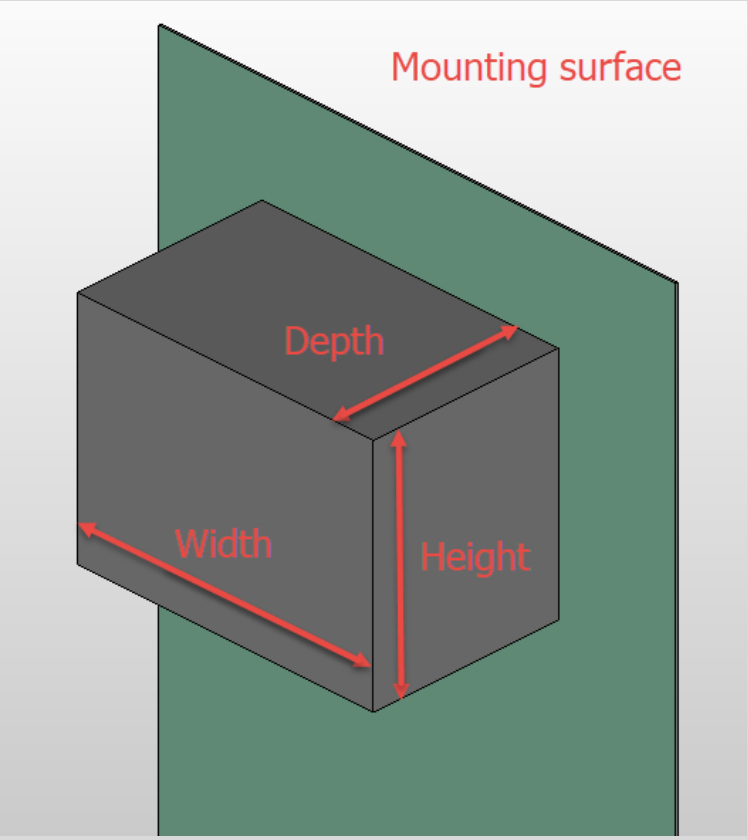

Space requirement

Optional.

This field is calculated automatically. The values from the Width and Height fields are used, based on the following formula: (b*h) with b = width and h = height.

Mounting surface

Is reserved for the end user and should be set to "Not defined".

External placement

Is reserved for the end user and must not be filled.

Graphical macro <22018>

In this field, enter the EPLAN macro with the display type "3D mounting layout" and optionally Panel layout" (2D). The 3D Assembly Macro is not mandatory for products that are only used in the field or have no relevant meaning in the 3D representation (e.g. Core routing, length calculation, space requirements) (e.g. bridges, terminal plates).

Pay attention to the path information that is based on the information given in the chapter „General definition > Path specifications: creation of the folder structure and file names / references“.

> In this macro, only display representations for panel layout (3D mounting layout and panel layout) are permitted. All other display representations (multi-line, single-line, overview, ...) must be defined in the macro under technical data.

_Pfadangaben_bzw._Aufbau

Image file <22045>

A representative product image shall be indicated in this field. This is used as a preview image on the EPLAN Data Portal.

Pay attention to the path information that is based on the information given in the chapter „General definition > Path specifications: creation of the folder structure and file names / references“.

> Valid image formats are:
>
> jpg, jpeg, png or bmp

_Pfadangaben_bzw._Aufbau

Center mismatch

It is not necessary to specify the center offset when using a 3D macro.

Clip-on height

It is not necessary to specify the clip-on height when using a 3D macro.

Mounting depth

It is not necessary to specify the mounting depth when using a 3D macro.

Texture

It is not necessary to specify the texture when using a 3D macro.

Mounting clearance Width / Height / Depth

Here, the **maximum** installation distance of the device determined from various aspects (thermal, mechanical ...) must be entered in mm. If values are stored here, the space requirement is calculated according to the following formula:

Tab: Assembly

An assembly is a collection of parts belonging to one device (e.g., a pushbutton with a NO contact, the appropriate bracket, and the pushbutton head). The assembly has its own part number and can contain subassemblies.

Detailed information can be found in the EPLAN Online Help page.

For creating assemblies select the New popup menu item and, depending on the current selection, select Assembly entry from the subsequent menu.

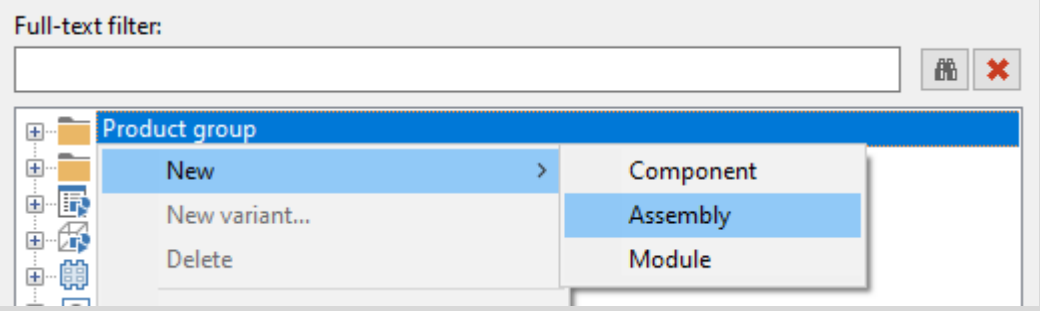

For assemblies the Function template tab is grayed out and function definitions will be entered from the function definitions which are assigned to the subassemblies, automatically after calling the “Sum up function templates” from **Parts management > Extras > Sum up function templates**.

Distributed placement of assembly

Activate the checkbox if the assembly is to be placed in the 3D mounting layout in a distributed manner (e.g., main switch distributed to panel and door). In this case, 3D macros of individual physical items must be assigned to subassemblies.

The below image on the right shows the distributed placement of SIEMENS SIMATIC IM 155-6PN/2 part which consists of an Interface Module and a Server Module (highlighted items -A00).

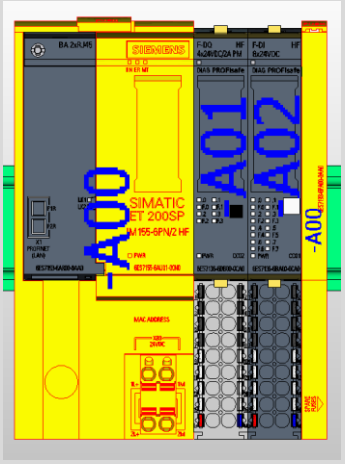

Deselect this check box for other assemblies that are placed together (e.g., complete enclosure’s base/plinth with all pieces which are united into one 3D macro for the ease of

placement in the 3D mounting layout). In this case, one 3D macro must be assigned to this assembly part.

Break up in summarized parts list

By means of the setting from this drop-down list you specify whether assemblies are to be broken up in the bill of material. The default value "From settings", is reserved for the end user and must not be used. Depending on how you want this assembly to be ordered, select “No” if the assembly itself should be listed in the bill of material or “Yes” if each subassembly must be listed in the bill of material individually.

For example, for the SIEMENS SIMATIC IM 155-6PN/2 assembly part (SIE.6ES7155-6AU01-0CN0), this setting must be selected to “No” because when customer orders the Interface Module it always comes with the Server Module in one packaging.

The Server Module (SIE.6ES7193-6PA00-0AA0) can be ordered separetaly, but the Interface Module cannot be ordered without the Server Module. Therefore, you must create the Interface Module with a dummy part number (e.g., SIE.6ES7155-IM155-6PN2-HF) in EPLAN for the purpose of distributed placement of individual items in the 3D mounting layout.

When you create a subassembly with a dummy part number you must activate the EDS.Part.AuxiliaryPart checkbox in the User-defined properties tab to specify that the part has a dummy part number in EPLAN and cannot be ordered separately because it’s not listed in the manufacturer’s catalogue. Pay attention to the chapter “Record type: Part > Tab: User-defined properties”.

General | Prices / ... | User-defi... | Free pro... | Attributes | Mountin... | Assembly | Accesso... | Technica...

Row	Quantity	Part number	Variant	Item number	Supplementary text	DT ID	Length
1	1	SIE.6ES7155-IM155-6PN2-HF	1				0.00 m
2	1	SIE.6ES7193-6PA00-0AA0	1				0.00 m

Pay attention to the sorting order of the subassemblies in the Assembly tab, especially for the assemblies which must be placed in a distributed manner.

Quantity

This property must be equal to or greater than 1.

Part number

Enter the part number of subassembly in this field.

Variant

This field must be filled with the part’s variant designation.

Item number

Is reserved for the end user and must not be filled.

Supplementary text

Is reserved for the end user and must not be filled.

DT ID

Is reserved for the end user and must not be filled.

Length

Input in this column is only possible for parts with length specifications (for example cables, connections, lines / conduits, hoses), but not for parts from the "Mechanics" generic product group. For such a part, for example a cable, you can enter a part of the length here that you have stored at the part itself.

Tab: Accessories

The specification of accessories is optional.

Part is accessory

Optional.

This characteristic is to be set if this part is only an accessory for another part and cannot be used without it.

Tab: Technical data

Technical characteristics

Optional.

Group number

Is reserved for the end user and must not be filled.

Part group

Is reserved for the end user and must not be filled.

Function group

Is reserved for the end user and must not be filled.

Wearing part

Is reserved for the end user and must not be filled.

Spare part

Is reserved for the end user and must not be filled.

Lubrication / maintenance

Is reserved for the end user and must not be filled.

Service time

Is reserved for the end user and must not be filled.

Stress

Is reserved for the end user and must not be filled.

Procurement

Is reserved for the end user and must not be filled.

Macro <22145>

The EPLAN schematic macro must be entered in this field. The EPLAN schematic macro must be stored in this field. This macro may contain all representation types except "3D mounting layout".

Pay attention to the path information that is based on the information given in the chapter „General definition > Path specifications: creation of the folder structure and file names / references“.

Connection point pattern: Name <22941>

The correct connection point pattern must be entered here. If the component has different mounting positions, the respective connection point pattern must be stored as a local connection point pattern in the macro.

Connection point patterns are not mandatory for products used exclusively in the field. It is also permitted to store a local connection point pattern in the 3D-Macro. In this case, an additional connection point pattern must not be stored here.

Connection point pattern: Offset in X-direction <22277>

A possible offset in X-direction in mm is to be indicated here.

Connection point pattern: Offset in Y-direction <22278>

A possible offset in Y-direction in mm is to be indicated here.

Tab: Documents

File / Hyperlink <22280>

In order to fulfill the EDS, the first File / Hyperlink property index must be a hyperlink to the article's specific web page or PDF document on the Internet. If the article itself does not have a specific web page, a hyperlink to the manufacturer's / supplier's online catalogue or alternatively the manufacturer's / supplier's main web page must be used.

It is recommended to provide a hyperlink in this format <company's global web address>/<article number> (e.g., https://www.wago.com/2200-1201) where all the technical data for the article are documented and accessible in one place.

Additional documents / hyperlinks can be specified optionally in row 2 to 20.

Pay attention to the path information that is based on the information given in the chapter „General definition > Path specifications: creation of the folder structure and file names / references"

Designation <22279>

It is recommended to use a short document designation in this field.

Pay attention to the definition in the chapter "General definition> Multilingual fields". Mehrsprachige Felder

Tab: Manufacturing

Drilling pattern <22217>

The correct drilling pattern of the article must be stored here.

Offset in X-direction <19605>

A possible offset in X-direction in mm is to be indicated here.

Offset in Y-direction <19606>

A possible offset in Y-direction in mm is to be indicated here.

Tab: Data for reports

Is reserved for the end user and must not be filled.

Tab: Function templates

The properties depend on the respective product group and are therefore explained in the respective product-specific chapters.

Tab: Properties

The properties depend on the respective product group and are therefore explained in the respective product-specific chapters.

Tab: Safety-related values

Is reserved for the end user and must not be filled.

Record type: Drilling pattern

Tab: Drilling pattern

Name <22217>

The name of the drilling pattern is specified here. The name should be structured as follows:

<Manufacturer: Short name>.< AnyText >

Pay attention to the path information that is based on the information given in the chapter „General definition > Path specifications: creation of the folder structure and file names / references“.

Description <22930>

If several drilling patterns are assigned to an article for selection, a description must be stored for the purpose of differentiation. If only one drilling pattern can be selected, the description is optional.

Pay attention to the definition in the chapter “General definition> Multilingual fields”. Mehrsprachige Felder

Tab: Cut-outs

The correct drilling pattern must be stored here.

Tab: Attributes

Is reserved for the end user and must not be filled.

Record type: Connection point pattern

Tab: Connection point pattern

Name

The name of the Connection point pattern is specified here. The name should be structured as follows:

<Manufacturer: Short name>.<AnyText>

Pay attention to the path information that is based on the information given in the chapter „General definition > Path specifications: creation of the folder structure and file names / references“.

Description

Optional.

Here an additional short description of the connection point pattern can be added.

Pay attention to the definition in the chapter “General definition> Multilingual fields”. Mehrsprachige Felder

Standard connection point: Connection category

Is reserved for the end user and should be set to "Undefined”.

Standard connection point: Connection dimension

Is reserved for the end user and must not be filled.

Standard connection point: Wire termination processing (EPLAN Cabinet)

Is reserved for the end user and should be set to "Undefined".

Standard connection point: Additional length

Is reserved for the end user and should be set to "0”.

Standard connection point: Routing direction

Is reserved for the end user and should be set to "Automatic”

Tab: Connection points

Connection point designation

The designation of the respective connection must be entered here. If the connection point pattern is for terminals, this field must not be filled.

Plug designation

If a plug designation has been assigned for device or PLC connections, it must be entered here.

Level

Mandatory field only for terminals. Enter the floor of the terminal here.

Internal / External index

This field must not be filled, as a unique connection designation is required for terminals.

X/Y/Z Position

Enter here the distance of the connection in X/Y/Z direction from the zero point (along the component width).

Routing direction

Here you can select the connection point direction from the list.

X/Y/Z vector

These values define the vector of the wiring direction

Additional length

Is reserved for the end user and must not be filled.

Connection category

Select the correct connection version from the list below.

See the how to do chapter for more information.

Connection dimension

This information is only relevant for some certain connections categorys.

See the how to do chapter for more information.

Min. cross-section

The minimum permissible wire cross section in mm² must be specified here. This information is mandatory if a single wire will be connected. If different types of wires (e.g. rigid, open-wire) have different cross-sections defined, the largest is specified.

This information is only relevant for some certain connections categorys.

See the how to do chapter for more information.

Max. cross-section

The maximum permissible wire cross section in mm² must be specified here. Exceptions see “Min. cross-section”. In case of different wire types (e.g. rigid, free-stranded) and different cross-sections are defined, the smallest is specified in each case.

This information is only relevant for some certain connections categorys.

See the how to do chapter for more information.

Max. number of connections

Here the number of maximum connections allowed at the connection must be specified.

This information is only relevant for some certain connections categorys.

See the how to do chapter for more information.

Dual sleeve prescribed

Here it is necessary to determine whether double sleeves are prescribed at this connection when connecting 2 wires or not.

Min. AWG

Here the minimum permitted wire cross-section must be specified in AWG (numeric value without unit).

This information is only relevant for some certain connections categorys.

See the how to do chapter for more information.

If the item is not available in the US or Canadian market, this information is optional.

Max. AWG

Here the maximum permitted wire cross-section must be specified in AWG (numeric value without unit).

This information is only relevant for some certain connections categorys.

See the how to do chapter for more information.

If the item is not available in the US or Canadian market, this information is optional.

Socket size

This information is only relevant for some certain connections categorys.

See the how to do chapter for more information.

Min. tightening torque

If no minimum and maximum value is defined, but only a single value, the following values are defined in min. and max is the identical value.

This information is only relevant for some certain connections categorys.

See the how to do chapter for more information.

Max. tightening torque

See Min. tightening torque.

Stripping length

The length in millimeters on which the wire assembly machine has to cut the isolation has to be entered here.

This information is only relevant for some certain connections categorys.

See the how to do chapter for more information.

Bus interface: Name

Optional.

Tab: Attributes

Is reserved for the end user and must not be filled.

Connection point pattern – How to do

This chapter describes the recommended procedure for creating connection point pattern. In particular the effects of the connection category on the corresponding properties. The properties to be filled depend on the connection category. See an overview in the Excel table "EPLAN_Data_Standard_Product_group_overview_xxx" on the "Connection point pattern" tab.

The 3D connection point pattern only lists connections or terminals which are connected via a single wire. This also includes wires that are bundled as cables in the further course of the installation. The situation at the connection point (terminal strip) of the electrical components is decisive.

Electrical connections which are connected to a product by multi-pole plugs or sockets are not included in the 3D connection diagram. Usually, these are connections that are made using prefabricated cables. Typical examples are:

- Network connection / RJ45

- USB

- Mx- sockets / plugs (e.g. M8, M12)

- Sub-D

Likewise, the following connection situations are not included in the 3D connection point pattern:

- Connection point where the braided shield of a cable is connected to the housing, e.g. by clamping to a shielding plate

- electrical connections that are made without connecting a wire via mechanical contact elements between each other or automatically by the mechanical assembly of two components, e.g. backplane bus.

Only the following listed connection categorys are to be used to create the connection point pattern:

Electrical engineering	Fluid power
Screw connection	Plug-in connection
Spring pulley connection	Push-wire connection
Push-in connection	Internal thread
Penetration connection	External thread
Insulation-displacement connection	
Bolt connection	
Flat plug-in connector	
Crimp connection	
Band connection	
Rail connection	
Soldering lug connection	
Wrap post	

Screw connection

Picture 2 Phoenix Contact (3044076)

Property	Value
Connection category	**Screw connection**
Connection dimension	
min. cross-section	0,14 mm²
max. cross-section	4 mm²
Min. AWG	26
Max. AWG	12
Max. number of connections	2
Dual sleeve prescribed	False
Socket size	PZ2
Min. tighening torque	0,5 Nm
Max. tighening torque	0,5 Nm
Stripping length	9 mm

Spring pulley connection

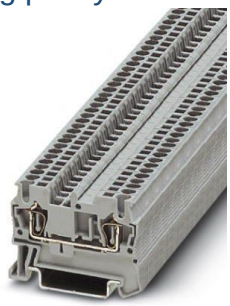

Picture 3 Phoenix Contact (3031076)

Property	Value
Connection category	**Spring pulley connection**
Connection dimension	
min. cross-section	0,08 mm²
max. cross-section	1,5 mm²
Min. AWG	28
Max. AWG	16
Max. number of connections	1
Dual sleeve prescribed	False
Socket size	
Min. tighening torque	
Max. tighening torque	
Stripping length	9 mm

Push-in connection

Picture 4 Phoenix Contact (3208130)

Property	Value
Connection category	**Push-in connection**
Connection dimension	
min. cross-section	0,14 mm²
max. cross-section	1,5 mm²
Min. AWG	26
Max. AWG	14
Max. number of connections	1
Dual sleeve prescribed	False
Socket size	
Min. tighening torque	
Max. tighening torque	
Stripping length	8 mm

Penertration connection

Picture 5 Phoenix Contact (3050031)

Property	Value
Connection category	**Penertration connection**
Connection dimension	
min. cross-section	0,5 mm²
max. cross-section	2,5 mm²
Min. AWG	20
Max. AWG	14
Max. number of connections	1
Dual sleeve prescribed	False
Socket size	
Min. tighening torque	
Max. tighening torque	
Stripping length	9 mm

Insulation-displacement connection

Picture 6 Siemens (8WH3003-0CE07)

Property	Value
Connection category	**Insulation-displacement connection**
Connection dimension	
min. cross-section	0,25 mm²
max. cross-section	1,5 mm²
Min. AWG	24
Max. AWG	16
Max. number of connections	1
Dual sleeve prescribed	False
Socket size	
Min. tighening torque	
Max. tighening torque	
Stripping length	9 mm

Bolt connection

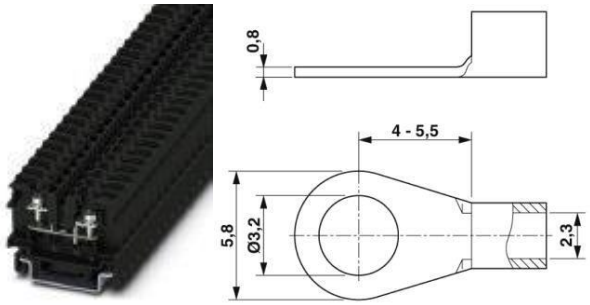

Picture 7 Phoenix Contact (3281103)

Property	Value
Connection category	**Bolt connection**
Connection dimension	3,2 mm
min. cross-section	0,5 mm²
max. cross-section	1,25 mm²
Min. AWG	26
Max. AWG	12
Max. number of connections	2
Dual sleeve prescribed	
Socket size	PZ2
Min. tighening torque	0,6 Nm
Max. tighening torque	1 Nm
Stripping length	

Flat plug-in connector

Picture 8 Phoenix Contact (1953017)

Property	Value
Connection category	**Flat plug-in connector**
Connection dimension	2,8x0,8 mm
min. cross-section	0,5 mm²
max. cross-section	6 mm²
Min. AWG	20
Max. AWG	10
Max. number of connections	1
Dual sleeve prescribed	False
Socket size	
Min. tighening torque	
Max. tighening torque	
Stripping length	

Rail connection

Property	Value
Connection category	**Rail connection**
Connection dimension	6x3 mm
min. cross-section	
max. cross-section	
Min. AWG	
Max. AWG	
Max. number of connections	
Dual sleeve prescribed	
Socket size	
Min. tighening torque	
Max. tighening torque	
Stripping length	

Plug-in connection / Push-wire connection / Internal thread / External thread

Property	Value	Value	Value	Value
Connection category	**Plug-in connection**	**Push-wire connection**	**Internal thread**	**External thread**
Connection dimension	8 mm	8 mm	G 1/8“	G 1/8“
min. cross-section				
max. cross-section				
Min. AWG				
Max. AWG				
Max. number of connections				
Dual sleeve prescribed				
Socket size				
Min. tighening torque				
Max. tighening torque				
Stripping length				

Devices with two or more connection rooms

Some products offer the possibility to connect several wires for the same identical connection in separate terminal or connection rooms. The rooms or connection possibilities are electrically connected to each other. From the point of view of a circuit diagram the separate rooms represent a single electrical connection or connection point. For each room separate coordinates can be determined. Therefore each room - even if the connection designation is identical - is listed separately with the corresponding coordinates in the 3D connection point pattern.

The listing of the connections in sequence of the corresponding rooms is independent of the information in the function template of the article. This means that even if the connection is mentioned several times in the 3D connection point pattern, it is only mentioned once in the function template.

Abbildung 9 Siemens

Example for a device with the connection designation "1L1" with two connection rooms within one screw connection

Connection point designation	Plug designation	Level	Internal / External index	X position	Y position	Z position	Routing direction
1L1		0	Undefined	11,55 mm	109,85 mm	57,90 mm	Move up
1L1		0	Undefined	14,55 mm	109,85 mm	57,90 mm	Move up

Picture 10 Siemens

Example for a device with the connection designation "1L1" with two connection rooms with two spring pulley connections:

Connection point designation	**Plug designation**	**Level**	**Internal / External index**	**X position**	**Y position**	**Z position**	**Routing direction**
1L1		0	Undefined	11,55 mm	109,85 mm	57,90 mm	Move up
1L1		0	Undefined	14,55 mm	109,85 mm	57,90 mm	Move up

Record type: Accessory placement

Tab: Accessory placement

Name

The name of the accessory placement is specified here. The name should be structured as follows:

<Manufacturer: Short name>.< AnyText >

Pay attention to the path information that is based on the information given in the chapter „General definition > Path specifications: creation of the folder structure and file names / references“.

Description

Insert here the description of the accessory placement.

Pay attention to the definition in the chapter “General definition> Multilingual fields”. Mehrsprachige Felder

Tab: Placement

Installation variant

Insert here the description of the installation variant

	Right Left Standard

Base point

Insert here the defined mounting points in a layout space.

Rotation

Select here by drop down menu the suitable rotation.

Offset in X/Y/Z-direction

If there is an offset for the automatic placement, insert here the correct value.

Can be moved

If this installation variant can be moved in the enclosure, the checkbox should be set.

Tab: Attributes

Row 1-100

This Field will be automatically filled if a function template is selected.

Specific data fields for Terminals

Pay attention to the main definitions in the chapter „Record type: Part“. Record type: Part

Tab: Properties: Terminal data

Color <22080>

Enter the colour of the terminal here. The value shall be stated in full and no abbreviations shall be used.

Pay attention to the definition in the chapter “General definition> Multilingual fields”. Mehrsprachige Felder

	Gray Blue

Material <22081>

Optional.

The material from which the insulating body of the terminal is made must be entered here.

Pay attention to the definition in the chapter “General definition> Multilingual fields”. Mehrsprachige Felder

Terminals: Degree of protection <22082>

Optional.

Pay attention to the definition in the chapter “General definition> Multilingual fields”. Mehrsprachige Felder

Connection point cross-section <22036>

Optional.

Max. power dissipation <22074>

Enter the maximum power dissipation per pole in Watt (Voltampere) with the corresponding unit W (VA). This is essential for the thermal calculation in Pro Panel.

Alignable <22229>

Since terminals can always be arranged in a row, the checkbox for terminals must always be set. This checkbox must also be activated for accessories that can be arranged in a row.

Terminals: Cross-section from <22084>

Enter the minimum connectable conductor cross-section in mm², indicating the unit. If for different wire types (e.g. rigid, free-stranded) different cross-sections are defined, the value from cross-section fine wire with conductor end sleeve must be selected.

If the item is only available in the US or Canadian market, this information is optional.

Terminals: Cross-section to <22085>

Enter the maximum connectable conductor cross-section in mm², indicating the unit. If for different wire types (e.g. rigid, free-stranded) different cross-sections are defined, the value from cross-section fine wire with conductor end sleeve must be selected.

If the item is only available in the US or Canadian market, this information is optional.

Terminals: AWG from <22086>

Enter the minimum connectable conductor cross-section in AWG (numeric value without unit). If for different wire types (e.g. rigid, free-stranded) different cross-sections are defined, the value from cross-section fine wire with conductor end sleeve must be selected.

If the item is not available in the US or Canadian market, this information is optional.

Terminals: AWG to <22087>

Enter the maximum connectable conductor cross-section in AWG (numeric value without unit). If for different wire types (e.g. rigid, free-stranded) different cross-sections are defined, the value from cross-section fine wire with conductor end sleeve must be selected.

If the item is not available in the US or Canadian market, this information is optional.

Current <22071>

Optional.

Voltage <22033>

Optional.

Terminals: Current IEC <22088>

The rated current in Ampere, with the corresponding unit A, is to be entered here.
This field is optional for pure PE terminals.
If the item is only available in the US or Canadian market, this information is optional.

Terminals: Voltage IEC <22089>

The rated voltage in Volt, with the corresponding unit V, is to be entered here.
This field is optional for pure PE terminals.
If the item is only available in the US or Canadian market, this information is optional.

Terminals: Current UL <22090>

The rated current in Ampere, with the corresponding unit A, is to be entered here.
This field is optional for pure PE terminals.
If the item is not available in the US or Canadian market, this information is optional.

Terminals: Voltage UL <22091>

The rated current in Volt, with the corresponding unit V, is to be entered here.
This field is optional for pure PE terminals.
If the item is not available in the US or Canadian market, this information is optional.

Terminals: Current CSA <22092>

Optional.

Terminals: Voltage CSA <22093>

Optional

Tab: Function templates

Detailed information and concrete examples for the presentation and structure of the function template of terminals can be found in the chapter „Terminals – How to do“.OLE_LINK101_Klemmen – How

Function definition

The correct function definition must be entered here.

Connection point designations

This field must be filled correctly. The connection designation must be indicated in lowercase letters or numbers.

> If fixed designations are printed on the terminals, these must be used even if they contradict the above specifications.

Connection point descriptions

Is reserved for the end user and must not be filled.

Connection point cross-section / diameter

Is reserved for the end user and must not be filled.

Connection dimension

Is reserved for the end user and must not be filled.

Subordinate DT / DT ID <21005>

Is reserved for the end user and must not be filled.

Terminal / Pin designation

Is reserved for the end user and must not be filled.

Terminal / Pin description

Is reserved for the end user and must not be filled.

Level

In this field, in the case of a multilevel terminal block, the corresponding level must be entered. If the terminal is not a multilevel terminal, level 0 must be selected here.

Safety function

If this is a safety function, set this checkbox.

Intrinsically safe

If the function is intrinsically safe, set this checkbox.

Symbol

Is reserved for the end user and must not be filled.

Symbol macro

Optional.

Terminal category

The design of the terminal must be entered here. The possible values are given and can be found in the following list:

For further information please refer to the EPLAN Platform Online Help

Terminal with LED

If the terminal has an integrated LED, this checkbox must be set.

Terminal with plug-in adapter

If the terminal has a plug-in adapter, this checkbox must be set.

Description

Is reserved for the end user and must not be filled.

Template group (multi-line)

Is reserved for the end user and must not be filled.

Labeling type

Is reserved for the end user and must not be filled.

Terminals – How to do

This chapter shows how the function templates for different terminals should be designed.

Feed-through terminal with bridge possibility

Figure 1 for example Phoenix Contact (3031212)

Row	Function definition	Connection point designations	Level	Safety function	Intrinsically safe	Terminal category	Terminal with LED	Terminal with plug-in adapter
1	Terminal with saddle jumper, 2 connection points	a¶b	0	FALSE	FALSE	Feed-through terminal	FALSE	FALSE

Feed-through terminal with bridge possibility

Figure 2 for example Phoenix Contact (3209578)

Row	Function definition	Connection point designations	Level	Safety function	Intrinsically safe	Terminal category	Terminal with LED	Terminal with plug-in adapter
1	Terminal with saddle jumper, 4 connection points	a¶b¶c¶d	0	FALSE	FALSE	Feed-through terminal	FALSE	FALSE

Three-level terminal with PE rail contact

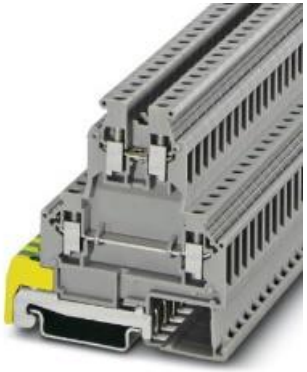

Figure 3 for example Phoenix Contact (0461018)

Row	Function definition	Connection point designations	Level	Safety function	Intrinsically safe	Terminal category	Terminal with LED	Terminal with plug-in adapter
1	PE terminal with rail contact, 1 connection point	b	1	FALSE	FALSE	Feed-through terminal	FALSE	FALSE
2	Terminal, 2 connection points	c¶d	2	FALSE	FALSE	Feed-through terminal	FALSE	FALSE
3	Terminal with saddle jumper, 2 connection points	e¶f	3	FALSE	FALSE	Feed-through terminal	FALSE	FALSE

Sensor/Actuator Terminal Block

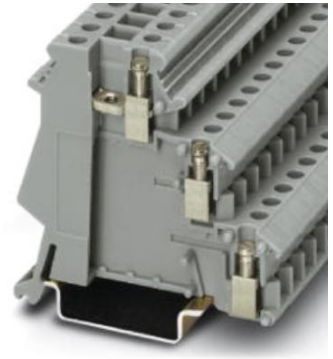

Figure 4 for example Phoenix Contact (2715966)

Row	Function definition	Connection point designations	Level	Safety function	Intrinsically safe	Terminal category	Terminal with LED	Terminal with plug-in adapter
1	Terminal, 1 connection point	b	1	FALSE	FALSE	Feed-through terminal	FALSE	FALSE
2	Terminal, 1 connection point	d	2	FALSE	FALSE	Feed-through terminal	FALSE	FALSE
3	Terminal with saddle jumper, 2 connection points	e¶f	3	FALSE	FALSE	Feed-through terminal	FALSE	FALSE

In case of multi-level terminals, the assignment of the connection point designation must be observed. The designation always starts on the internal side and is continued. If only one connection is available for a level (see example in Figures 4 & 5) and thus e.g. the connection is missing on the internal side, the corresponding connection designation must also be omitted.

Potential distributors

Figure 5 for example Phoenix Contact (3031047)

Row	Function definition	Connection point designations	Level	Safety function	Intrinsically safe	Terminal category	Terminal with LED	Terminal with plug-in adapter
1	Terminal with saddle jumper, 9 connection points	a¶b¶c¶d¶e¶f¶g¶h¶i	0	FALSE	FALSE	Feed-through terminal	FALSE	FALSE

Quadruple-deck terminal block with PE terminal in level 1

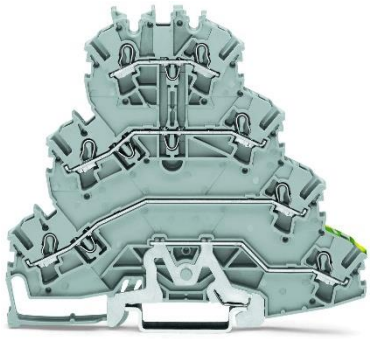

Figure 6 for example WAGO (2002-4127)

Row	Function definition	Connection point designations	Level	Safety function	Intrinsically safe	Terminal category	Terminal with LED	Terminal with plug-in adapter
1	Terminal with saddle jumper, 2 connection points	g¶h	4	FALSE	FALSE	Feed-through terminal	FALSE	FALSE
2	Terminal with saddle jumper, 2 connection points	e¶f	3	FALSE	FALSE	Feed-through terminal	FALSE	FALSE
3	Terminal with saddle jumper, 2 connection points	c¶d	2	FALSE	FALSE	Feed-through terminal	FALSE	FALSE
4	PE terminal with rail contact, 1 connection point	b	1	FALSE	FALSE	Feed-through terminal	FALSE	FALSE

Quadruple-deck terminal block with blank terminal in level 1

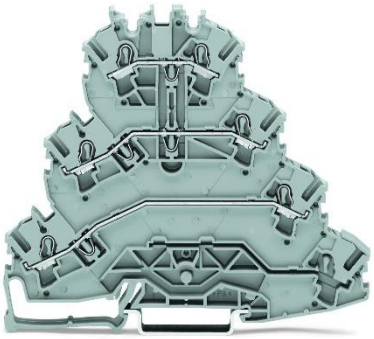

Figure 7 for example WAGO (2002-4101)

Row	Function definition	Connection point designations	Level	Safety function	Intrinsically safe	Terminal category	Terminal with LED	Terminal with plug-in adapter
1	Terminal with saddle jumper, 2 connection points	g¶h	4	FALSE	FALSE	Feed-through terminal	FALSE	FALSE
2	Terminal with saddle jumper, 2 connection points	e¶f	3	FALSE	FALSE	Feed-through terminal	FALSE	FALSE
3	Terminal with saddle jumper, 2 connection points	c¶d	2	FALSE	FALSE	Feed-through terminal	FALSE	FALSE

In case of multilevel terminals, function definitions which belong to each terminal level, must be sorted from highest level to the lowest level which in another way means the first row in the function template must represent the function definition of the highest terminal level.

Level 0 must not be used in multilevel terminals.

Specific data fields for Cables

Pay attention to the main definitions in the chapter „Record type: Part“. Record type: Part

Tab: Properties: Cable data

Cable type / Type designation <22030>

The type designation of the cable must be entered here.

The entry is limited to 40 characters.

ÖLFLEX® CLASSIC 100

Number of connections <22031>

The number of connections in the cable must be entered here.

The entry is limited to 6 characters.

Length (prefabricated) <22055>

For prefabricated cables, the length in Meters, with the corresponding unit m, must be entered here.

In the case of spiral cables, the length of the cable after extension is decisive.

Connection: Cross-section / diameter <22032>

Here the cross section of the connection, without indication of the corresponding unit, is to be entered. If there are several different cross-sections in the cable, the specification must be separated by a slash (/) without spaces.

0,14/0,5

Unit for connection cross-section / diameter <22068>

The corresponding unit that was used in the property "Connection: Cross-section / diameter" is to be entered here.

Possible values are predefined and can be taken from the EPLAN platform Online Help.

No. of connections and cross-section / diameter <22069>

The number of connections with cross section must be entered here. Different cross-sections can be indicated by a "+".

3x1,5

3G2,5

10x0,14+2x0,5

10x0,25 +(2x1,5) + (3x0,5)

Cable / Conduit: Designation in graphic <22064>

Is reserved for the end user and must not be filled.

Image file <22045>

A representative product image shall be entered in this field. This is used as a preview image on the EPLAN Data Portal.

Pay attention to the path information that is based on the information given in the chapter „General definition > Path specifications: creation of the folder structure and file names / references“.

Cable assignment diagram form <22034>

The end user is reserved and must not be filled.

Voltage <22033>

The rated voltage of the cable, with the corresponding unit V, must be entered here. If multiple entries are necessary, the voltages must be separated by a forward slash (/) without spacings.

The entry is limited to 10 characters.

300/500 V

External diameter <22065>

Enter the outer diameter of the cable in millimeter, with the corresponding unit mm. In case of flat cables, the width shall be expressed in millimeter with the corresponding unit mm.

The entry is limited to 16 characters.

Min. bending radius <22063>

Enter the minimum bending radius of the cable in millimeter, with the corresponding unit mm.

Copper weight <22066>

Optional.

The copper content in kg/km in the cable must be entered here.

The input is limited to 10 characters.

Weight / length <22067>

Optional.

Enter the weight of the cable in kg/km.

The input is limited to 10 characters.

Intrinsically safe <22114>

If the cable is intrinsically safe and it is ensured that no spark is generated during operation or in the event of a short circuit which could ignite any explosive atmosphere (gas or liquid), the checkbox must be set.

Short-circuit proof <22115>

If the cable is sure about short circuit, i.e. it is guaranteed that the cable also does not burn with a short circuit between the single veins, this check box is to be selected.

Tab: Function templates

Detailed information and concrete examples for the presentation and structure of the function template of terminals can be found in the chapter „Cable – How to do“.OLE_LINK102_Cable – _How

Function definition

The correct function definition must be entered here.

> For the prefabricated cables it is necessary to have at least one cable definition only. The function template could be extended as specified below.

Subordinate DT / DT ID <21005>

Is reserved for the end user and must not be filled.

Intrinsically safe

If the function is intrinsically safe, this checkbox must be set.

Description

Is reserved for the end user and must not be filled.

Template group (multi-line)

Is reserved for the end user and must not be filled.

Connection color / number

The color code according to IEC 60757 has to be used as designation in case it contains wires with different colors. The codes will be extended according the wire numbering if the cable contains wire of the same color, e.g: BK1, BK2, BK3, RD1, RD2, etc. The color code does not have to specified, if the cable contains only wires with identical color. In this case only the numbering is indicated: 1, 2, 3, etc. . A shielding is generally designated with ‘SH’. Multiple shields are numbered in sequence: SH1, SH2, SH3, etc. Under no circumstances, must there be wires with an identical designation. If a color is not listed in the table IEC 60757, a suitable two digit abbreviation must be selected.

For bright shades, an „L“ has to be placed in front oft the existing color code (Light Blue→ LBU).

For dark shades, an „D“ has to be placed in front oft the existing color code (Dark Blue → DBU).

For cable cores with multiple colors, the combination of colors must be selected from the definition of IEC 60757 from top to bottom. (Red-Blue cable core → RDBU). If a color is dominating, it has to be set first. (White cable core with blue stripes → WHBU)

> Black – BK
> Brown – BN
> Red – RD
> Orange – OG
> Yellow – YE
> Green – GN
> Blue – BU
> Violet – VT
> Grey – GY
> White – WH

Pink – PK
Turquoise – TQ
Green-Yellow – GNYE
Gold – GD
Silver - SR

Connection: Cross-section / diameter

In the case of connections, the cross-section without unit is to be entered here.

Shielded by

If the cable, individual connections or a shield is shielded, the name of the shield must be entered here. This name must match the given name and connection color / number of the shield.

Pair index

The pair index applies to paired wires. If this is the case, enter 1.1 for the first wire and 1.2 for the second wire.

Potential type

For PE connections or shields, the correct potential must be entered (PE or SH). For all other potentials "undefined" should be selected.

Possible values are predefined and can be taken from the EPLAN platform Online Help.

Pipe class

Not used for cables.

Cable – How to do

This chapter shows how the function templates for different cables should be designed.

ÖLFLEX® CLASSIC 110 4G1,5

Figure 6 for example LAPP (1119304) or similar

Row	Function definition	Intrinsically safe	Connection color / number	Connection: Cross-section / diameter	Shielded by	Pair index	Potential type
1	Cable definition	FALSE					
2	Conductor / wire	FALSE	1	1,5			Undefined
3	Conductor / wire	FALSE	2	1,5			Undefined
4	Conductor / wire	FALSE	3	1,5			Undefined
5	Conductor / wire	FALSE	GNYE	1,5			PE

ÖLFLEX® SERVO 2YSLCY-JB 4G2,5

Figure 7 for example LAPP (0036426) or similar

Row	Function definition	Intrinsically safe	Connection color / number	Connection: Cross-section / diameter	Shielded by	Pair index	Potential type
1	Cable definition	FALSE					
2	Conductor / wire	FALSE	BN	2,5	SH		Undefined
3	Conductor / wire	FALSE	BK	2,5	SH		Undefined
4	Conductor / wire	FALSE	GY	2,5	SH		Undefined
5	Conductor / wire	FALSE	GNYE	2,5	SH		PE
6	Conductor / wire	FALSE	SH				SH

Servo Cable n. Siemens FX 5008

Figure 8 for example LAPP (0025725 / 3x(2x0,14 D) + 4x0,14 + 2x0,5 C) or similar

Row	Function definition	Intrinsically safe	Connection color / number	Connection: Cross-section / diameter	Shielded by	Pair index	Potential type
1	Cable definition	FALSE					
2	Conductor / wire	FALSE	YE	0,14	SH1	1.1	Undefined
3	Conductor / wire	FALSE	GN	0,14	SH1	1.2	Undefined
4	Conductor / wire	FALSE	SH1		SH		SH
5	Conductor / wire	FALSE	BK	0,14	SH2	2.1	Undefined
6	Conductor / wire	FALSE	BN	0,14	SH2	2.2	Undefined
7	Conductor / wire	FALSE	SH2		SH		SH
8	Conductor / wire	FALSE	RD	0,14	SH3	3.1	Undefined
9	Conductor / wire	FALSE	OG	0,14	SH3	3.2	Undefined
10	Conductor / wire	FALSE	SH3		SH		SH
11	Conductor / wire	FALSE	GY	0,14	SH		Undefined
12	Conductor / wire	FALSE	BU	0,14	SH		Undefined
13	Conductor / wire	FALSE	WHYE	0,14	SH		Undefined
14	Conductor / wire	FALSE	WHBK	0,14	SH		Undefined
15	Conductor / wire	FALSE	BNRD	0,5	SH		Undefined
16	Conductor / wire	FALSE	BNBU	0,5	SH		Undefined
17	Conductor / wire	FALSE	SH				SH

Specific data fields for Relays, contactors

Pay attention to the main definitions in the chapter „Record type: Part“. Record type: Part

Tab: Properties: Contactor data

Voltage <22033>

Here the rated voltage of the contactor coil in Volt, with the corresponding unit V, is to be entered. If, due to the difference between DC and AC, there are different voltages or voltage ranges, the DC value must be selected.

The input is limited to 10 characters.

24 V
230 V
20-230 V

Current <22071>

Optional.

Voltage type <22070>

The voltage type of the voltage entered in the Voltage field must be entered here.

The entry is limited to 5 characters and should be selected from the following list:

DC
AC
AC/DC

Tripping current <22075>

Optional

Holding power <22073>

Optional

Max. power dissipation <22074>

Enter the maximum power dissipation of the coil in Watt, with the corresponding unit W. This is essential for the thermal calculation in Pro Panel.

Switching capacity <22072>

Optional

Connection point cross-section <22036>

Here, the maximum connectable conductor cross-section (hostile with wire end sleeve) in square millimeter, with the corresponding unit mm² must be entered. If the component is only available on the American or Canadian market, select the corresponding AWG numerical value without unit.

Tab: Function templates

Detailed information and concrete examples for the presentation and structure of the function template of relay and contactors can be found in the chapter „Relays, contactors - How to do“.OLE_LINK103_How_to_do:

Function definition

The correct function definition must be stored here.

Connection point designations

The correct connection designation of the function must be stored here.

Connection point descriptions

Optional.

The correct connection description of the function must be stored here.

Connection point cross-section / diameter

There is no information to be given here. This information must be stored in the connection diagrams.

Connection dimension

Is reserved for the end user and must not be filled.

Subordinate DT / DT ID <21005>

Is reserved for the end user and must not be filled.

Contact / coil index

If the article has several coils, an index is to be stored here. This index assigns the contacts to the corresponding coils.

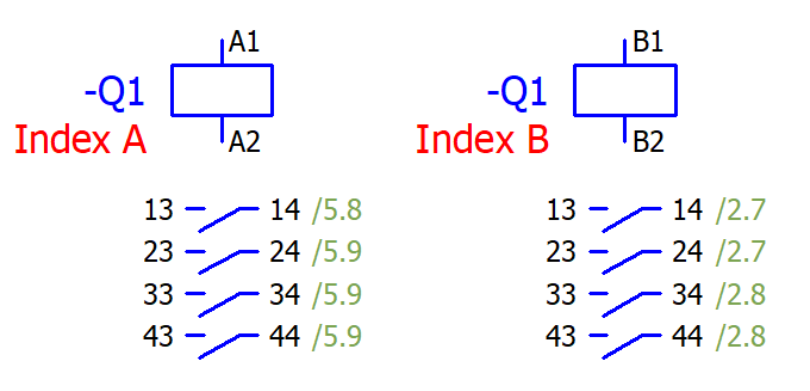

Row	Function definition	Connection point designations	Contact / coil index
1	Coil for power contactor	A1¶A2	Index A
2	NO auxiliary contact	13¶14	Index A
3	NO auxiliary contact	23¶24	Index A
4	NO auxiliary contact	33¶34	Index A
5	NO auxiliary contact	43¶44	Index A
6	Coil for power contactor	B1¶B2	Index B
7	NO auxiliary contact	13¶14	Index B
8	NO auxiliary contact	23¶24	Index B
9	NO auxiliary contact	33¶34	Index B
10	NO auxiliary contact	43¶44	Index B

Technical characteristics

There is no information to be given here. You should make this entry on the Technical Data tab page._Tab:_Technical_data

Safety function

If the function is a safety function, the checkbox must be set.

Intrinsically safe

If the contact is intrinsically safe, the checkbox must be set.

Symbol

Is reserved for the end user and must not be filled.

Symbol macro

Optional.

Description

Is reserved for the end user and must not be filled.

Template group (multi-line)

Is reserved for the end user and must not be filled.

Relays, contactors - How to do

This chapter shows how the function templates for relay and contactors should be designed.

Power contactor (three NO contacts, one NO auxiliary contact)

Figure 9 for example SIEMENS (3RT2015-1BB41)

Row	Function definition	Connection point designations	Connection point cross-section / diameter	Connection dimension	Contact / coil index	Technical characteristics	Safety function	Intrinsically safe	Symbol macro
1	Coil for power contactor	A1¶A2					FALSE	FALSE	
2	Power NO contact	1/L1¶2/T1					FALSE	FALSE	
3	Power NO contact	3/L2¶4/T2					FALSE	FALSE	
4	Power NO contact	5/L3¶6/T3					FALSE	FALSE	
5	NO auxiliary contact	13¶14					FALSE	FALSE	

Auxiliary contactor (two NO contacts, two NC contacts)

Figure 101 for example SIEMENS (3RH2122-2AB00)

Row	Function definition	Connection point designations	Connection point cross-section / diameter	Connection dimension	Contact / coil index	Technical characteristics	Safety function	Intrinsically safe	Symbol macro
1	Coil for auxiliary relay	A1¶A2					FALSE	FALSE	
2	NO auxiliary contact	13¶14					FALSE	FALSE	
3	NC auxiliary contact	21¶22					FALSE	FALSE	
4	NC auxiliary contact	31¶32					FALSE	FALSE	
5	NO auxiliary contact	43¶44					FALSE	FALSE	

Specific data fields for Protection devices

Pay attention to the main definitions in the chapter „Record type: Part“. Record type: Part

Tab: Properties: Component data

Voltage <22033>

Here the operating voltage of the contactor coil in Volt, with the corresponding unit V, is to be stored.

The entry is limited to 10 characters.

Voltage type <22070>

The voltage type of the voltage entered in the Voltage field must be entered here.

The entry is limited to 5 characters and should be selected from the following list:

DC
AC
AC/DC

Current <22071>

Optional

Tripping current <22075>

Optional

Connection point cross-section <22036>

Here, the maximum connectable conductor cross-section (hostile with wire end sleeve) must be entered in square millimeter, with the corresponding unit mm². The information refers to the contacts.

Switching capacity <22072>

Optional

Holding power <22073>

Optional

Max. power dissipation <22074>

Enter the maximum power dissipation of the coil in Watt with the corresponding unit W. This is essential for the thermal calculation in Pro Panel.

Tab: Function templates

Detailed information and concrete examples for the presentation and structure of the function template of protection devices can be found in the chapter „Protection devices - How to do“.OLE_LINK104_How_to_do:_1

Function definition

The correct function definition must be stored here.

Connection point designations

The correct connection designation of the function must be stored here.

Connection point descriptions

Optional.

The correct connection description of the function must be stored here.

Connection point cross-section / diameter

There is no information to be given here. This information must be stored in the connection diagrams.

Connection dimension

Is reserved for the end user and must not be filled.

Subordinate DT / DT ID <21005>

Is reserved for the end user and must not be filled.

Technical characteristics

There is no information to be given here. You should make this entry on the Technical Data tab page._Tab:_Technical_data

Safety function

If the function is a safety function, the checkbox must be set.

Intrinsically safe

If the contact is intrinsically safe, the checkbox must be set.

Symbol

Is reserved for the end user and must not be filled.

Symbol macro

Optional.

Description

Is reserved for the end user and must not be filled.

Template group (multi-line)

Is reserved for the end user and must not be filled.

Contact / coil index

Optional.

Protection devices - How to do

This chapter shows how the function templates for protection devices should be designed.

Circuit-breaker 3-pole

Figure 21 for example SIEMENS (5SY4316-7)

Row	Function definition	Connection point designations	Technical characteristics	Safety function	Intrinsically safe	Symbol macro
1	Triple circuit breaker	1¶2¶3¶4¶5¶6		FALSE	FALSE	

Motor overload switch

Figure 32 for example SIEMENS (3RV2011-1DA10)

Row	Function definition	Connection point designations	Technical characteristics	Safety function	Intrinsically safe	Symbol macro
1	Motor overload switch three-pole	1/L1¶2/T1¶3/L2¶4/T2¶5/L3¶6/T3		FALSE	FALSE	

Specific data fields for Connections

Pay attention to the main definitions in the chapter „Record type: Part“. _Record_type:_Part

Tab: Properties: Connection data

Cable type / Type designation <22030>

Here the cable type (the physical properties of the cable) must be stored.

Entry is limited to 40 characters.

N07V-K

Length (prefabricated) <22055>

Optional.

Unit for connection cross-section / diameter <22068>

Unit for the cross-section or diameter of the connections of a cable or conduit.

Possible values are predefined and can be taken from the EPLAN platform Online Help

Voltage <22033>

Optional.

Entry is limited to 10 characters.

External diameter <22065>

Enter the outer diameter of the connection in millimeters, indicating the unit mm.

Entry is limited to 15 characters.

Min. bending radius <22063>

Enter the minimum bending radius of the connection in millimeters, indicating the unit mm.

Copper weight <22066>

Optional.
Specifies the proportion of copper in the cable.

Entry is limited to 10 characters.

Weight / length <22067>

Optional.

Entry here is relative to the unit kg/km.

Entry is limited to 10 characters.

Image file <22045>

A representative product image shall be entered in this field. This is used as a preview image on the EPLAN Data Portal.

Pay attention to the path information that is based on the information given in the chapter „General definition > Path specifications: creation of the folder structure and file names / references“.

Short-circuit proof <22115>

Optional.

Tab: Function templates

Detailed information and concrete examples for the presentation and structure of the function template of connections can be found in the chapter „Connections - How to do“.OLE_LINK105_How_to_do:_2

Function definition

The correct function definition must be stored here.

Connection color / number

The color code according to IEC 60757 has to be used as designation in case it contains wires with different colors. The codes will be extended according the wire numbering if the cable contains wire of the same color, e.g: BK1, BK2, BK3, RD1, RD2, etc. The color code does not have to specified, if the cable contains only wires with identical color. In this case only the numbering is indicated: 1, 2, 3, etc. . A shielding is generally designated with ‘SH’. Multiple shields are numbered in sequence: SH1, SH2, SH3, etc. Under no circumstances, must there be wires with an identical designation. If a color is not listed in the table IEC 60757, a suitable two digit abbreviation must be selected.

For bright shades, an „L“ has to be placed in front oft the existing color code (Light Blue→ LBU).

For dark shades, an „D“ has to be placed in front oft the existing color code (Dark Blue → DBU).

For cable cores with multiple colors, the combination of colors must be selected from the definition of IEC 60757 from top to bottom. (Red-Blue cable core → RDBU). If a color is dominating, it has to be set first. (White cable core with blue stripes → WHBU)

Black – BK
Brown – BN
Red – RD
Orange – OG
Yellow – YE
Green – GN
Blue – BU
Violet – VT
Grey – GY
White – WH
Pink – PK
Turquoise – TQ
Green-Yellow – GNYE
Gold – GD
Silver - SR

Subordinate DT / DT ID <21005>

Is reserved for the end user and must not be filled.

Connection: Cross-section / diameter

In the case of connections, the cross-section without unit is to be indicated here.

Shielded by

Not used for connections.

Pair index

Not used for connections.

Potential type

For PE connections or shields, the correct potential must be specified in the following list. For all other potentials, the selection "undefined" should be selected.

> Possible values are predefined and can be taken from the EPLAN platform Online Help.

Intrinsically safe

Not used for connections.

Pipe class

Not used for connections.

Description

Is reserved for the end user and must not be filled.

Template group (multi-line)

Is reserved for the end user and must not be filled.

Connections - How to do

This chapter shows how the function templates for connections should be designed.

H07V-K 1X1,5

Figure 43 for example LAPP (4520011) or similar

Row	Function definition	Connection color / number	Connection: Cross-section / diameter	Potential type
1	Conductor / wire	BK	1.5	Undefined

H07V-K 1X1,5 (PE)

Figure 14 for example LAPP (4520001) or similar

Row	Function definition	Connection color / number	Connection: Cross-section / diameter	Potential type
1	Conductor / wire	GNYE	1.5	PE

Abbildung 11 LAPP (4520001) Abbildung ähnlich

Specific data fields for Plugs

Pay attention to the main definitions in the chapter „Record type: Part“. Record type: Part

Tab: Properties: Plug data

Current <22071>

The rated current of the connector must be stored here.

Plugs: Number of pins <22035>

Number of pins in the plug.

Plugs: Pin arrangement <22095>

Optional.

Plugs: Clearance <22096>

Optional.

Plugs: Creepage distance <22097>

Optional.

Plugs: Standard / inverse <22098>

Optional.

Plugs: Pin type <22099>

Optional.

Pay attention to the definition in the chapter “General definition> Multilingual fields”. Mehrsprachige Felder

Plugs: Type of construction <22100>

Optional.

Pay attention to the definition in the chapter “General definition> Multilingual fields”. Mehrsprachige Felder

Plugs: Connecting technique <22101>

Optional.

Pay attention to the definition in the chapter “General definition> Multilingual fields”. Mehrsprachige Felder

Plugs: Leading pins <22102>

Optional.

Plugs: Coding <22103>

Is reserved for the end user and must not be filled.

Connection point cross-section <22036>

Optional.

Tab: Function templates

Detailed information and concrete examples for the presentation and structure of the function template of plugs can be found in the chapter „Plugs – How to do“.OLE_LINK106_How_to_do:_3

Function definition

The correct function definition must be stored here.

Subordinate DT / DT ID <21005>

Is reserved for the end user and must not be filled.

Terminal / Pin designation

Insert here the designation of a terminal or pin.

Terminal / Pin description

Optional.

Safety function

Optional.

Intrinsically safe

Optional.

Symbol

Optional. If a unique assignment is required, it is recommended to make a selection here.

Symbol macro

Optional.

Beschreibung

Optional.

Pay attention to the definition in the chapter “General definition> Multilingual fields”. Mehrsprachige Felder

Template group (multi-line)

Optional.

Connection point designations

Optional.

Connection point descriptions

Optional.

Connection point cross-section / diameter

Optional.

Connection dimension

Optional.

Plugs - How to do

This chapter shows how the function templates for plugs must be designed.

The function template must be assigned to the connector inserts only (male and female insert). No function template should be assigned to the individual pins.

MALE INSERT

Figure 55 for example HARTING (09330102602)

Row	Function definition	Terminal / Pin designation	Symbol
1	Plug definition for male pins		
2	Male pin, 2 connection point	1	
3	Male pin, 2 connection point	2	
4	Male pin, 2 connection point	3	
5	Male pin, 2 connection point	4	
6	Male pin, 2 connection point	5	
7	Male pin, 2 connection point	6	
8	Male pin, 2 connection point	7	
9	Male pin, 2 connection point	8	
10	Male pin, 2 connection point	9	
11	Male pin, 2 connection point	10	
12	PE male pin, 2 connection point	PE	

FEMALE INSERT

Figure 66 for example HARTING (09330102702)

Row	Function definition	Terminal / Pin designation	Symbol
1	Plug definition for female pins		
2	Female pin, 2 connection point	1	
3	Female pin, 2 connection point	2	
4	Female pin, 2 connection point	3	
5	Female pin, 2 connection point	4	
6	Female pin, 2 connection point	5	
7	Female pin, 2 connection point	6	
8	Female pin, 2 connection point	7	
9	Female pin, 2 connection point	8	
10	Female pin, 2 connection point	9	
11	Female pin, 2 connection point	10	
12	PE female pin, 2 connection point	PE	

Male Crimp contact

Figure 77 for example HARTING (09330006104)

The function template must be empty (see description at the beginning of this chapter).

Female Crimp contact

Figure 88 for example HARTING (09330006204)

The function template must be empty (see description at the beginning of this chapter).

Specific data fields for Enclosure

Pay attention to the main definitions in the chapter „Record type: Part“. Record type: Part

Tab: Accessories

Part is accessory

If "Enclosure" cannot be set in the selection.

Required

If the appropriate accessories are required, i.e. forced accessories, the checkbox must be set.

Part number / name

Enter the article number of the possible accessories here.

Designation 1

This field is automatically compiled after the accessory has been chosen.

Variant

This field is automatically compiled after the accessory has been chosen.

Record type

This field is automatically compiled after the accessory has been chosen.

Accessory placement

Detailed information can be found in the chapter Accessory placement. Datensatztyp: Zubehörplatzierung

Tab: Function definition

Function definition

Here insert the correct function definition for the enclosure

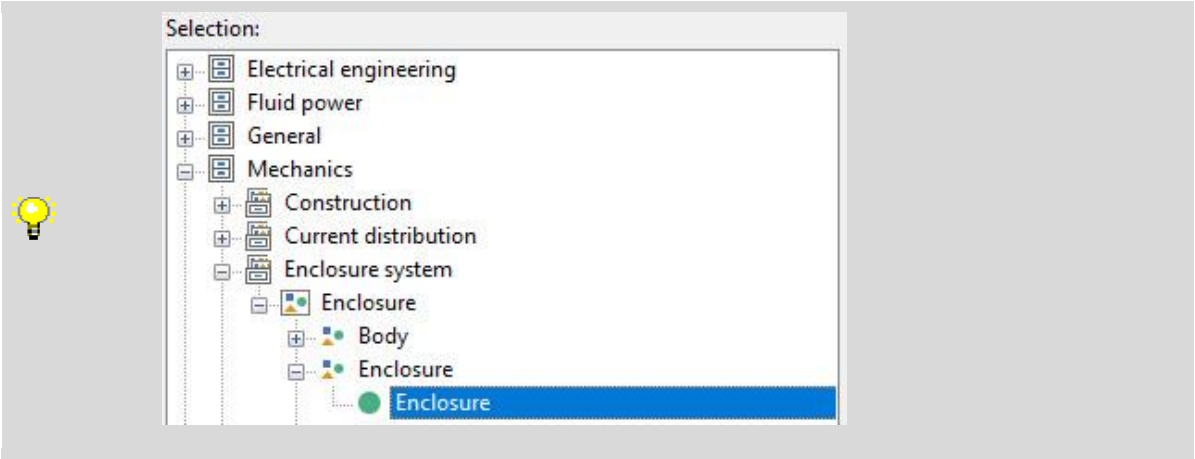

Item

Nothing to do. The value changes automatically after selecting the enclosure function.

Tab: Properties: Housing data

Mounting panel: Usable width <22117>

Optional.

Mounting panel: Usable height <22116>

Optional.

Mounting panel: Max. mounting depth <22118>

Optional.

Mounting panel: Mounting space <22078>

Optional.

Door: Usable width <22120>

Optional.

Door: Usable height <22119>

Optional.

Door: Max. mounting depth <22121>

Optional.

Door: Mounting space <22079>

Optional.

Tab: Properties: Enclosure

Wall thickness <22216>
Optional.

Adjoining distance <22191>
Optional.

Profile horizontal: Height <22187>
Optional.

Profile horizontal: Depth <22188>
Optional.

Profile vertical: Width <22189>
Optional.

Profile vertical: Depth <22190>
Optional.

Tab: Properties: Door

Door: Type <22192>
Optional.

Door: Hinge <22193>
Optional.

Tab: Doors

X/Y/Z position
Optional.

Part number
Optional.

Variant
Optional.

Tab: Mounting panels

X/Y/Z position
Optional.

Mounting location
Optional.

Angle
Optional.

Part number
Optional.

Variant
Optional.

Specific data fields for Cable ducts

Pay attention to the main definitions in the chapter „Record type: Part“. _Record_type:_Part

Tab: Mounting data

Weight

Is reserved for the end user and must not be filled.

Width

Enter here the device-specific width in mm.

Height

Must be 0,00 mm.

Depth

Enter here the device-specific depth in mm.

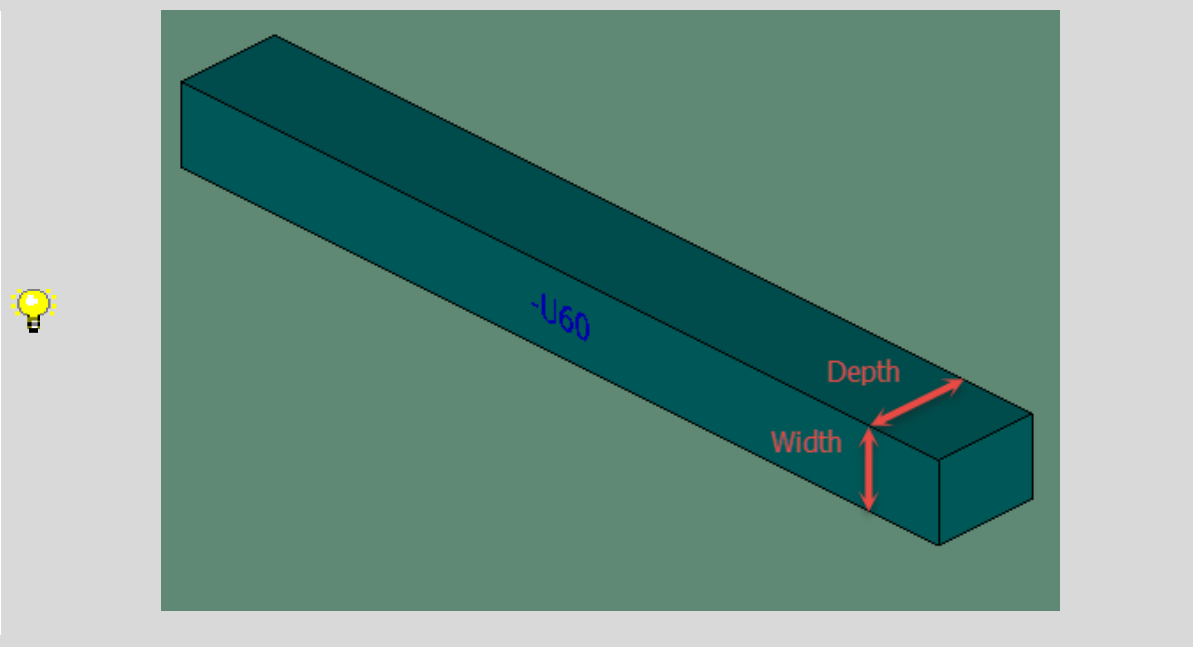

Space requirement

Optional.

This field is calculated automatically. The values from the Width and Height fields are used, based on the following formula: (b*h) with b = width and h = height.

Mounting surface

Is reserved for the end user and should be set to "Not defined”

External placement

Is reserved for the end user and must not be filled.

Graphical macro

Optional.

Pay attention to the path information that is based on the information given in the chapter „General definition > Path specifications: creation of the folder structure and file names / references“.

Image file

A representative product image shall be indicated in this field. This is used as a preview image on the EPLAN Data Portal.

Pay attention to the path information that is based on the information given in the chapter „General definition > Path specifications: creation of the folder structure and file names / references“.

Center mismatch

It is not necessary to specify the center offset when using a 3D macro.

Clip-on height

It is not necessary to specify the clip-on height when using a 3D macro.

Mounting depth

It is not necessary to specify the mounting depth when using a 3D macro.

Texture

It is not necessary to specify the texture when using a 3D macro.

Mounting clearance Width / Height / Depth

Is reserved for the end user and must not be filled.

Tab: Manufacturing

Preview

Is reserved for the end user and must not be filled.

Drilling pattern

The correct drilling pattern of the article must be stored here.

Offset in X-direction

A possible offset in X-direction in mm is to be indicated here.

Offset in Y-direction

A possible offset in Y-direction in mm is to be indicated here.

Tab: Function definition

Function definition

Here insert the correct function definition for the Wire duct:

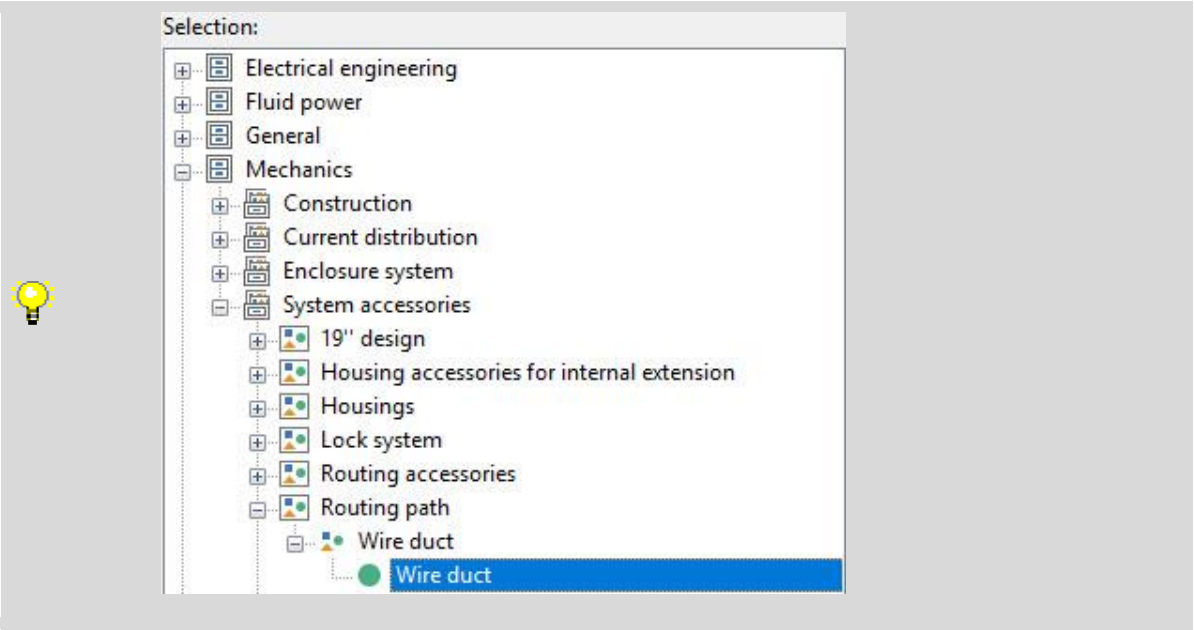

Item

The value changes automatically after selecting the wire duct function.

Tab: Properties: Wire duct data

Delivery length <22058>

The value of the delivery length in millimeter with the corresponding unit mm has to be stored here.

Finger width <22285>

Optional.

Slot width <22286>

Optional.

Distance of the pinch point <22287>

Optional.

Specific data fields for PLC

Pay attention to the main definitions in the chapter „Record type: Part“. Record type: Part

Tab: Properties: Component data

Voltage <22033>

Here the operating voltage of the Card in Volt, with the corresponding unit V, is to be stored.

The entry is limited to 10 characters.

Voltage type <22070>

The voltage type of the value entered in the "Voltage" field must be entered here.

The entry is limited to 5 characters and should be selected from the following list:

DC
AC
AC/DC

Current <22071>

Optional.

Tripping current <22075>

Optional.

Connection point cross-section <22036>

The maximum connectable conductor cross-section (hostile with wire end sleeve) in square millimeter, with the corresponding unit mm², must be entered here.

Pay attention to the definition in the chapter “General definition> Multilingual fields”. Mehrsprachige Felder

Switching capacity <22072>

Optional.

Holding power <22073>

Optional.

Max. power dissipation <22074>

Enter the maximum power dissipation per Card in Watt (Voltampere) with the corresponding unit W (VA). This is essential for the thermal calculation in Pro Panel.

Tab: Properties: PLC data

PLC type designation <22105>

The PLC- type description of the PLC- Card must be entered here. The entry must be made in the exact same spelling as it is used in the hardware catalogue of the manufacturer.

Device description: File name <22037>

Enter the file name including file name extensions but without the file path of the device description file of an PLC Card. In addition to the property "Device description : File name" there must be an entry made for the properties "Object description" or "Device description: Index in file". Within the property "Device description: File name" not only GSD-Filenames but also other entries can be stored e.g. the device identification of CC-Link Modules. For this purpose, a prefix followed by a colon must be entered before the actual device identification e.g. "CSP+:AJ65VBTCE2-8T". The entry is then exported unchanged. If the entry includes no prefix (no colon) or the prefix "GSD" e.g. "GSD:SIEM8139.GSD" it will be exported in the AutomationML-Format and interpreted as device description file.

Device description: Index in file <22283>

The index in the device description file of an PLC-Card has to be entered here. The Index allows the language neutral selection of an device within such files.

Object description <22038>

Optional.

Version <22104>

Optional.

PLC station type <22269>

Optional.

Bus coupler / head station <22019>

If the card is a bus coupler or head station, the checkbox must be set.

CPU <22020>

If the card is a CPU, the checkbox must be set.

Power supply <22052>

If the card is a power supply, the checkbox must be set.

Bus distribution device <22053>

If the card is a bus distribution device, the checkbox must be set.

PLC card is placed on head station <22290>

Optional.

Drive: Device type <22340>

Is reserved for the end user and must not be filled.

TemplateReference <22338>

Is reserved for the end user and must not be filled.

Address range (SIEMENS STEP 7 Classic) <22106>

Is reserved for the end user and must not be filled.

Address range 2 (SIEMENS STEP 7 Classic) <22261>
Is reserved for the end user and must not be filled.

PLC device: Data length (inputs) <20571>
Optional.

PLC device: Data length (outputs) <20573>
Optional.

PLC subdevice 1-12: Name <22293 ff.>
Optional.

PLC subdevice 1-12: Position (slot / module) <22305 ff.>
Optional.

PLC subdevice 1-12: Data length (inputs) <22363 ff.>
Optional.

PLC subdevice 1-12: Data length (outputs) <22364 ff.>
Optional.

PLC subdevice 1-12: PLC type designation <22365, 22341 ff.>
Optional.

PLC subdevice 1-12: Device description: Index in file <22366, 22352>
Optional.

Tab: Function templates

Function definition
The correct function definition must be stored here.

Subordinate DT / DT ID <21005>
Optional.

Channel designation <20407>
If available, enter the correct channel designation here. Only whole numbers (1, 2, 3...) should be used for the channel designation.

Safety function <21006>
If this is a safety function, set this checkbox.

Intrinsically safe <21003>
If the function is intrinsically safe, set this checkbox.

Symbol <21001>
Is reserved for the end user and must not be filled.

Symbol macro <21008>
Is reserved for the end user and must not be filled.

Description <20254>
Is reserved for the end user and must not be filled.

Template group (multi-line) <21023>
Optional.

Bus system <20308>
The correct bus system for function definitions that represent a bus connection must be entered here.

Connection point designations <21000>
The designation of the respective function must be entered here.

Connection point descriptions <21007>
The description of the respective function must be entered here.

Connection point cross-section / diameter <21021>
Is reserved for the end user and must not be filled.

Connection dimension <20374>
Is reserved for the end user and must not be filled.

Plug designation <20406>
The correct plug designation of the function must be entered here.

Signal range <20388>
Optional.

PLC subdevice: Index <20384>
Optional.

Macro presentation

In addition to the already mentioned 3D-representation types of an Macro, there are following required representation types and variants to represent a PLC in a circuit diagram. The Macros or their Fragments stated here, can be used from the Macro project „[EDS] Macroproject 20201112" as a template. The corresponding property arrangements are also stored here and must not be changed. The PLC type nukber is an exception. If it protrudes from the macro due to its length, the function „Fit text in position frame" can be executed. The property arrangement is prepared accordingly and also were designed so that font size as well as font colour can be changed from within the layer management. If it is desired to have additional representation types of Macros, excluding the already listed ones, these can be created in the macro variants which are not mentioned here.

Overview – Variant A to D

This representation type is used to display the overview of the Card. There should not be displayed more than 16 inputs or outputs per variant. Associated power supply connections of the card can be displayed in addition to the inputs or outputs in its corresponding Variant. If a card has more than 16 inputs or outputs, an additional variant has to be created.

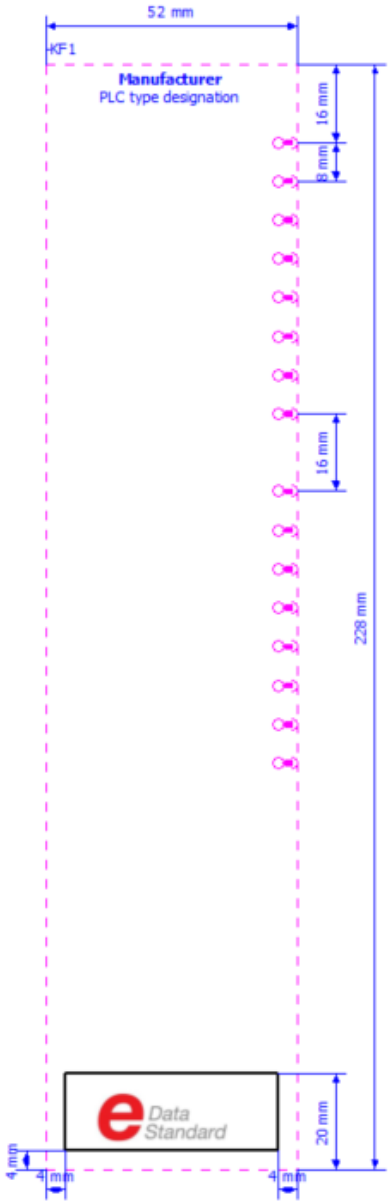

In this case, the second overview macro has to be displayed also in Variant A. Only if a third overview macro is necessary, the Variant B has to be used.

The order of placement of the connections should be made according to the following order (alphanumeric – numbers before letters):

- Plug designation
- Channel designation
- I/O connection points
- Power supply
- Card power supply
- Bus connection points
- Connection designation

The dimensions of the PLC-Box in the representation type "Overview" are prescribed and can be referred to from the figure shown. The manufacturers name as well as the PLC-type name is automatically transferred from the data of the corresponding part in the parts management and transferred automatically. There is also the option of inserting a manufacturers logo (in image format .jpg .jpeg .png). This is shown in the picture with the EDS logo and the black frame. The specified dimensions must be observed. If there is an additional relevant Graphic (e.g. internal forwarding of a potential) needed, it can be inserted. It is essential that this Graphic exclusively uses the EPLAN proprietary layers and the format properties as well as data is coming from that layer.

Figure 12 Dimensions overview macro

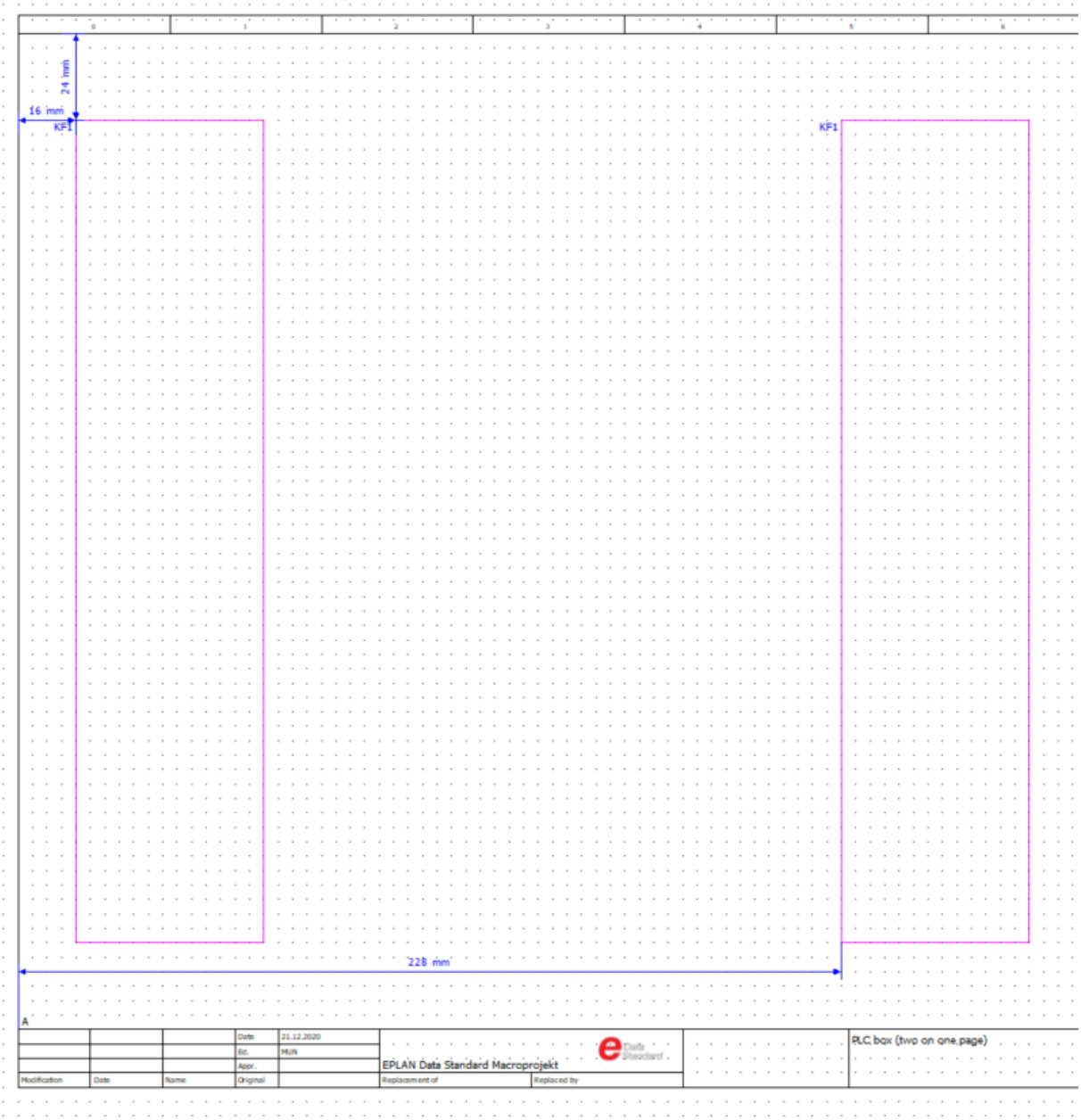

Figure 13 Arrangement of two overview macros on one page

The connections have to be consistently displayed with the presentation type "Overview" and have to be aligned to the right. The displayed properties can be referred to from the following figure and are pre-set by the prescribed property arrangement.

Channel Adr Plug_Designation:CP_Designation Sybolic address Function text
CP_Description

A selection of diverse possible connection types is deposited in the macro project mentioned above.

Overview – Variant E

In this representation type, the rack representation of the card has to be displayed. There are no connections allowed and the PLC-Box has to be carried out in the representation type "Overview". The dimensions of the PLC-Box and the position of the manufacturer logo (in valid formats: .jpg .jpeg .png) are prescribed and must not be changed. The displayed data is pre-set by the property arrangements and show values (e.g. PLC-Station name, CPU: Name, etc.) which are deposited in the corresponding properties of the main function. Describing Headings in the rack representation itself, are deposited in the "Supplementary fields [200] - [204]" of the PLC-Box in all available display languages of the EPLAN Platform.

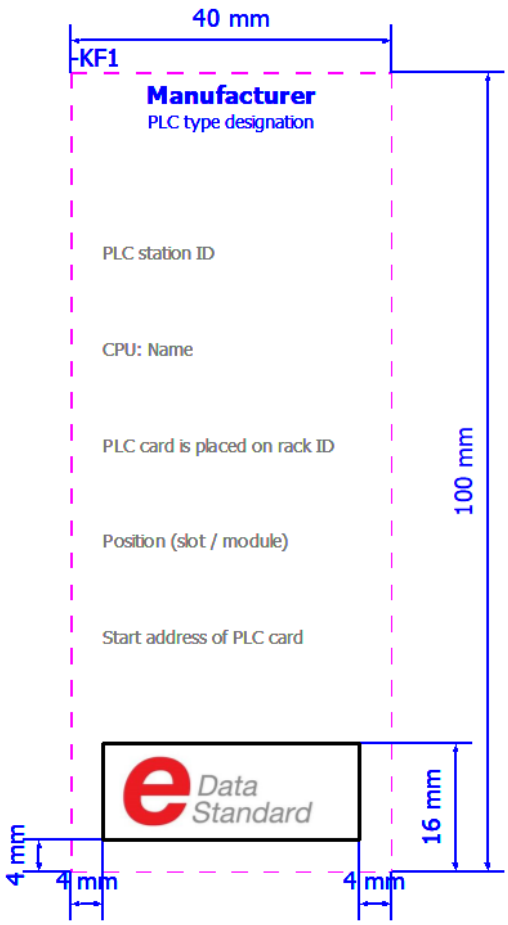

Figure 14 Rack display overview

Multiline

To ensure easy interchangeability, always use the symbol "352 / PLC_CBOX_LEFT" and - if necessary - in connection with the symbol "351 / PLC_CBOX_CON" for the multiline representation and place them at a distance of 8 mm from each other (see Figure 16). This could be found as a template in the macroproject mentioned above. If the connection type of the connection changes, others than the one just mentioned are available in the macroproject. The corresponding propertie arrangement is stored and must not be changed. The following properties are displayed and comply with the requirements of the IEC 61082-1 standard:

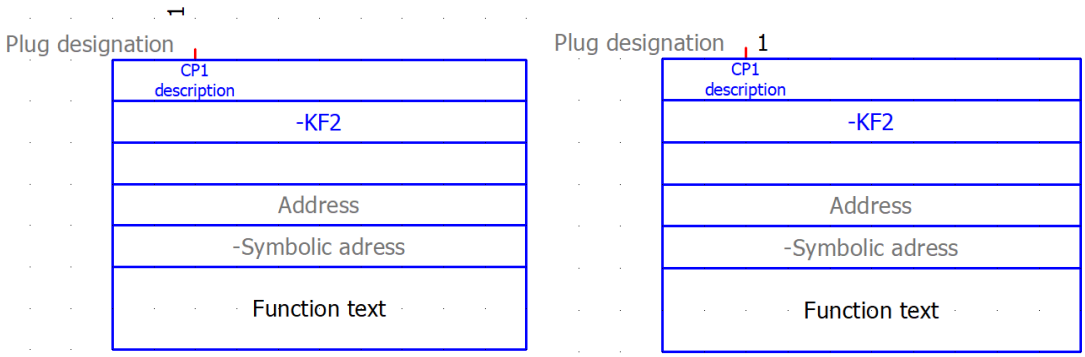

Figure 15 Multline, Variant A (with and without activated setting "Display rotated connection designation ")

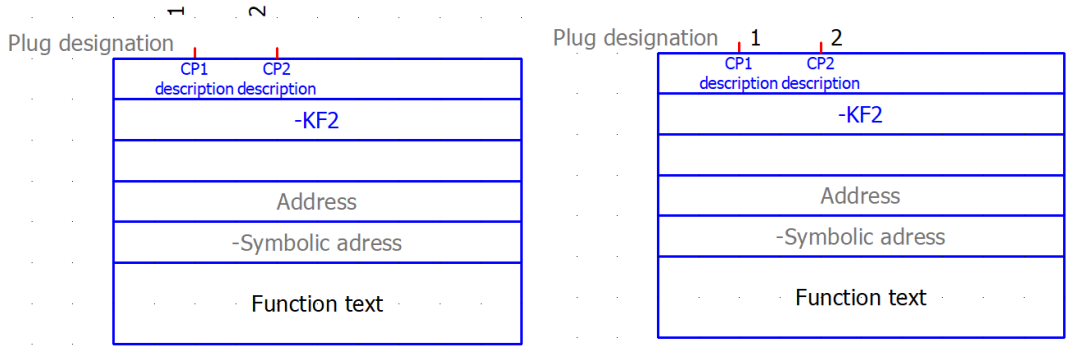

Figure 16 Multiline, Variant B (with and without activated setting "Display rotated connection designation ")

Single-line

The single-pole macro variant is used to display any bus structures. This type of representation must only to be created if the corresponding article has at least one bus connection. Several possible PLC boxes in the "single-line" representation type with different dimensions (each 40 mm wide) must be used, depending on whether one, two or more single-line connections are represented. The displayed properties comply with the IEC 61082-1 standard and are preset by the property arrangement and must not be changed.

The connections must all be displayed in the "Single-line" represantation and are oriented downwards. A selection of various possible connection types as well as PLC boxes are stored in the macro project mentioned above.

The following properties must be taken into account at the bus connection:

ID	Property	Value
20406	Plug designation	Mandatory
20447	Bus-Schnittstelle: Name	Mandatory (only for Ethernet-based bus systems)
20308	Bus system	Mandatory
21000	Connection point designation	Do not fill (Exception is, if the bus connection is also shown as multi-line - see How-do-to chapter)
21007	Connection point description	Do not fill (Exception is, if the bus connection is also shown as multi-line - see How-do-to chapter)

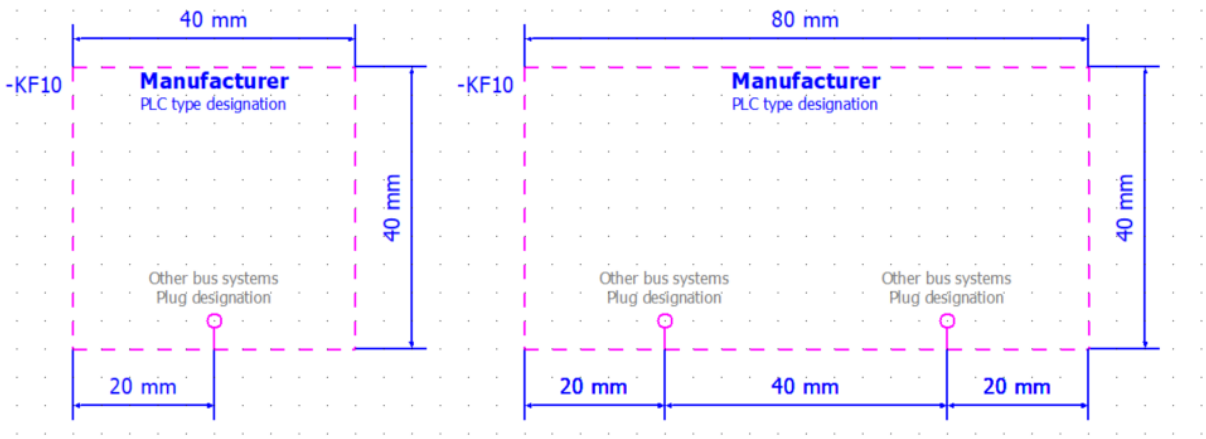

PLC – How to do

Physically existing connections without functionality (nc - contacts)

It often happens that there are connections on a device, but they do not provide any functionality (n.c. - not connected). In order to be able to include these correctly in the schematic, however, they must be created with the function definition "PLC connection, general" and the property "Disabled I/O connection <20438>" must be set.

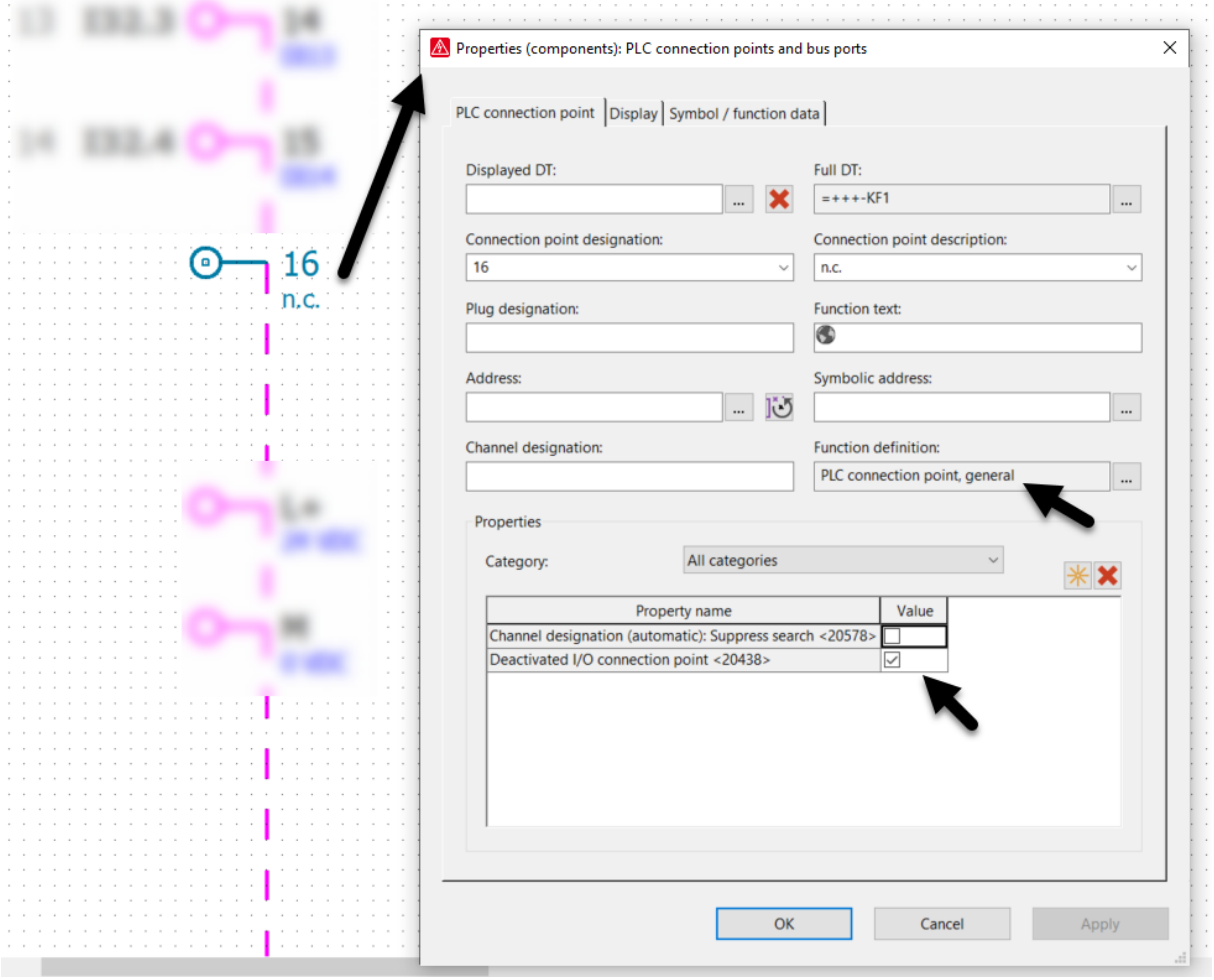

Bus connection point

Displaying Bus Ports in Single-line and Multi-line

If a bus connection is not connected via a plug but via individual connection points, it is necessary to provide an multi-line representation in addition to the single-line representation. For this purpose, the macro project provides multi-line bus connection points (IMPORTANT: one symbol) and a PLC box. In the function template, the bus connection point is represented by one function template (connection designation is filled). At least three lines are required in the connection point pattern (at least one per connection).

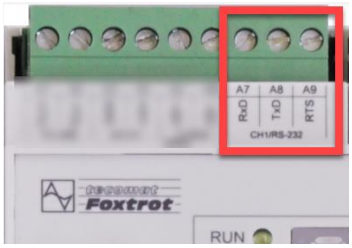

Figure 17 Teco (TXN 110 04)

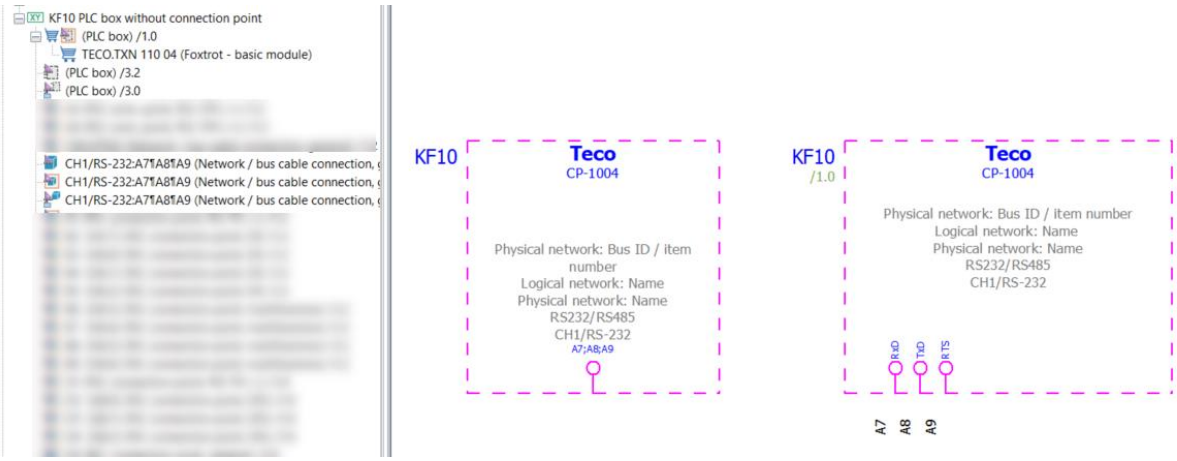

How to do

The number of connection points must be entered in the properties of the single-line bus connection point (Tab: Symbol / functional data) and the corresponding connection point designation (here A7¶A8¶A9) must be filled.

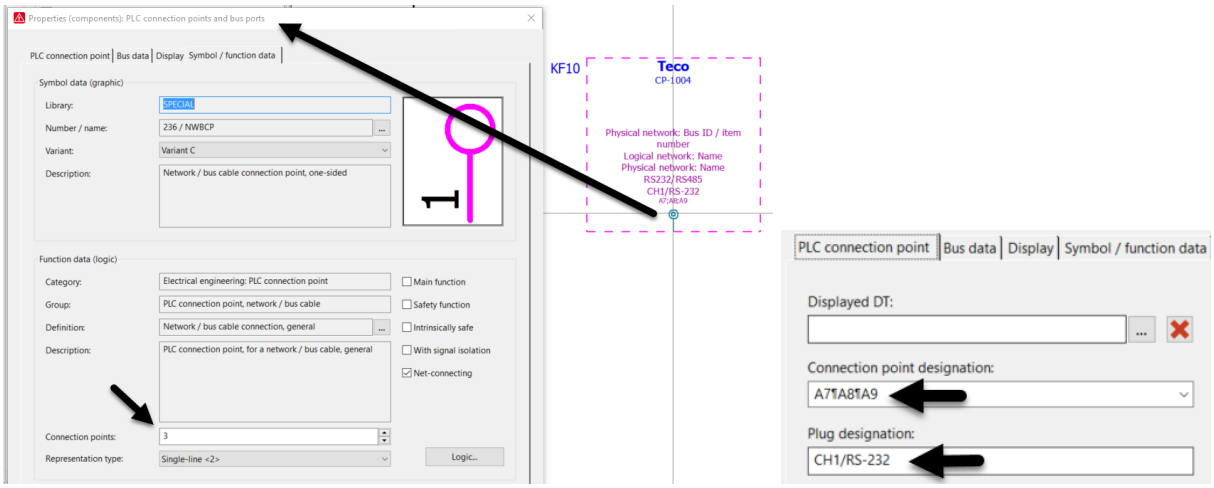

The same applies to the multi-line representation. Make sure that the information is identical (number of connection points / connection point designation):

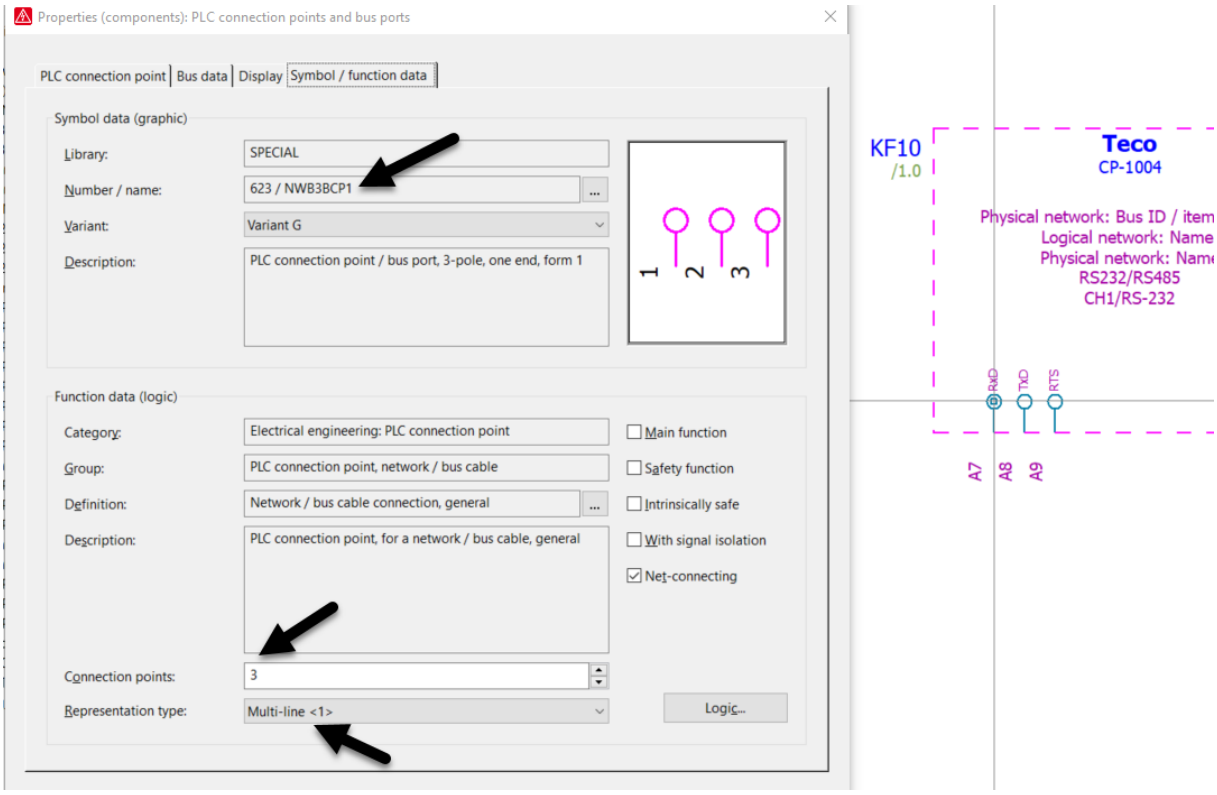

Specific data fields for Fluid Power

In this tab, you specify the specific data for individual part articles in the "Fluid Power" product group. This data can be set several times for each article. The differentiation is made using the variants.

Pay attention to the main definitions in the chapter „Record type: Part“. Record type: Part

Tab: Properties: Fluid

Max. Working pressure <22124>

The maximum operating pressure of the component (entered in [bar]) is entered here. The specification of the unit is automatically added.

The entry is limited to 15 characters.

Max. working pressure <22124>	16,00 bar

Control range <22125>

Enter the control range for the operating pressure here. The unit is [bar].

The entry is limited to 15 characters.

Max. working pressure <22124>	16,00 bar

Flow <22126>

Enter here how many liters per minute can flow through the component.

The entry is limited to 15 characters.

Flow <22126>	3200,00 l/min

Thread <22127>

The thread size of the connection is specified here.

The input is fixed to 6 characters. E.g. G 1/4“, G 2 1/2“, M8.

Thread <22127>	G 3/8"

Thread <22127>	3/8" - 24 UNF

External diameter <22065>

The external diameter is determined here. Unit is in [mm]. This property is only used for connections. This property is used to calculate the degree of filling of cable ducts or installation areas.

The entry is limited to 15 characters.

Inner diameter <22128>

Enter the value for the inside diameter of a connection in [mm] here.

The entry is limited to 15 characters.

Min. bending radius <22063>

Enter the minimum bending radius here e.g. 5 times the outer diameter. This property is only used for connections for routing in the installation space.

The entry is limited to 40 characters.

Length of stroke <22129>

Used for components with a moveable axis e.g. cylinder. Enter the stroke length in [mm].

The entry is limited to 15 characters.

Length of stroke <22129>	250 mm

Connection point <22130>

Enter the form of the connection of this component here, e.g. Thread, Flange.

Connection point <22130>	Thread

Connection point <22130>	Flange

The entry is limited to 10 characters.

Fluid Parts – How to

Compresed air filters:

Fluid power	
Max. working pressure <22124>	25,00 bar
Control range <22125>	16,00 bar
Flow <22126>	50000,00 l/min
Thread <22127>	G 2"
External diameter <22065>	
Inner diameter <22128>	
Min. bending radius <22063>	
Length of stroke <22129>	
Connection point <22130>	Thread

Fixed displacement pumps:

Fluid power	
Max. working pressure <22124>	0,60 bar
Control range <22125>	0,00 bar
Flow <22126>	1,60 l/min
Thread <22127>	G 1/4"
External diameter <22065>	
Inner diameter <22128>	
Min. bending radius <22063>	
Length of stroke <22129>	
Connection point <22130>	

Specific data fields for Housing

Pay attention to the main definitions in the chapter “Record type: Part”.

Tab: Function definition

Function definition

Select the correct function definition from the ‘Housings’ function category for the corresponding product subgroup.

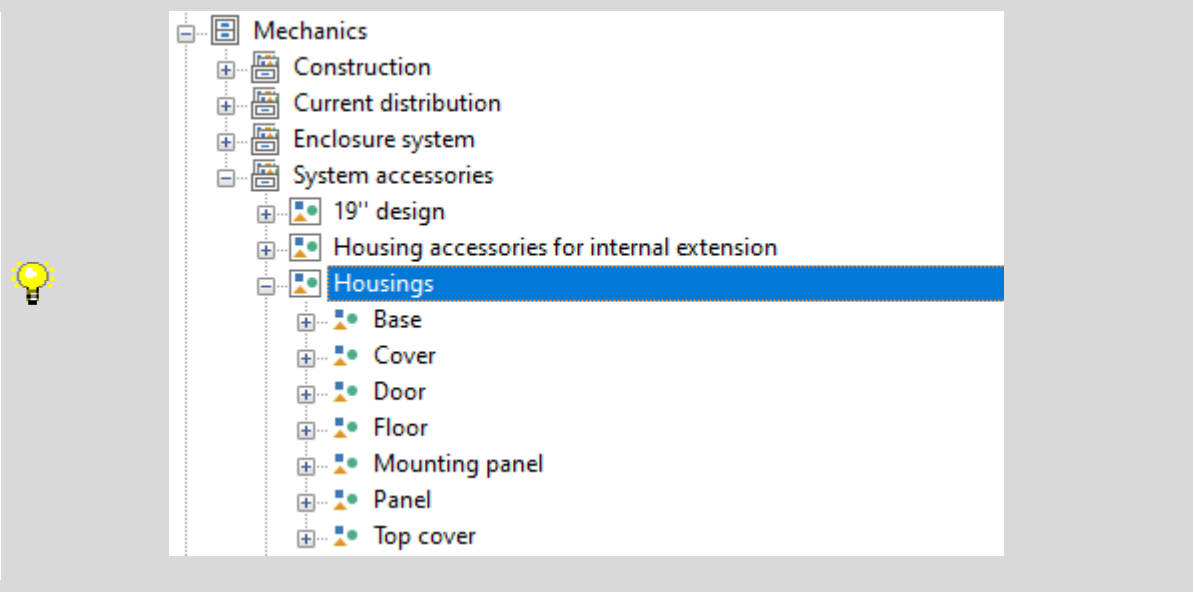

Tab: Properties: Housing data

Mounting panel: Usable width <22117>

Optional.

Mounting panel: Usable height <22116>

Optional.

Mounting panel: Max. mounting depth <22118>

Optional.

Mounting panel: Mounting space <22078>

Optional.

Door: Usable width <22120>

Optional.

Door: Usable height <22119>

Optional.

Door: Max. mounting depth <22121>

Optional.

Door: Mounting space <22079>

Optional.

Tab: Properties: Door

Door: Type <22192>

Optional.

Door: Hinge <22193>

Optional.

Door: Wall thickness <22194>

Optional.

Specific data fields for Housing accessories, internal extension

Pay attention to the main definitions in the chapter “Record type: Part”.

Tab: Mounting data

Pay attention to the chapter “Record type: Part > Tab: Mounting data” and if the item is a length-variable item pay attention to the chapter “General definitions > Length-variable items”.

Tab: Function definition

Function definition

Select the correct function definition for the corresponding product subgroup.

C horizontal rail

Function definition:	Profile rail
Item:	C horizontal rail

Cable clamp rail

Function definition:	Rail
Item:	User-defined rail

Mounting chassis

Function definition:	Chassis
Item:	Chassis

Mounting rail

Function definition:	Mounting rail
Item:	Mounting rail

Punched rail / Support rails

Function definition:	Enclosure component
Item:	Enclosure accessories general

Tab: Properties: Mounting rail

Width top <22198>

The width must be indicated here in millimeter with the corresponding unit mm for the top.

Width bottom <22199>

The width must be indicated here in millimeter with the corresponding unit mm for the bottom.

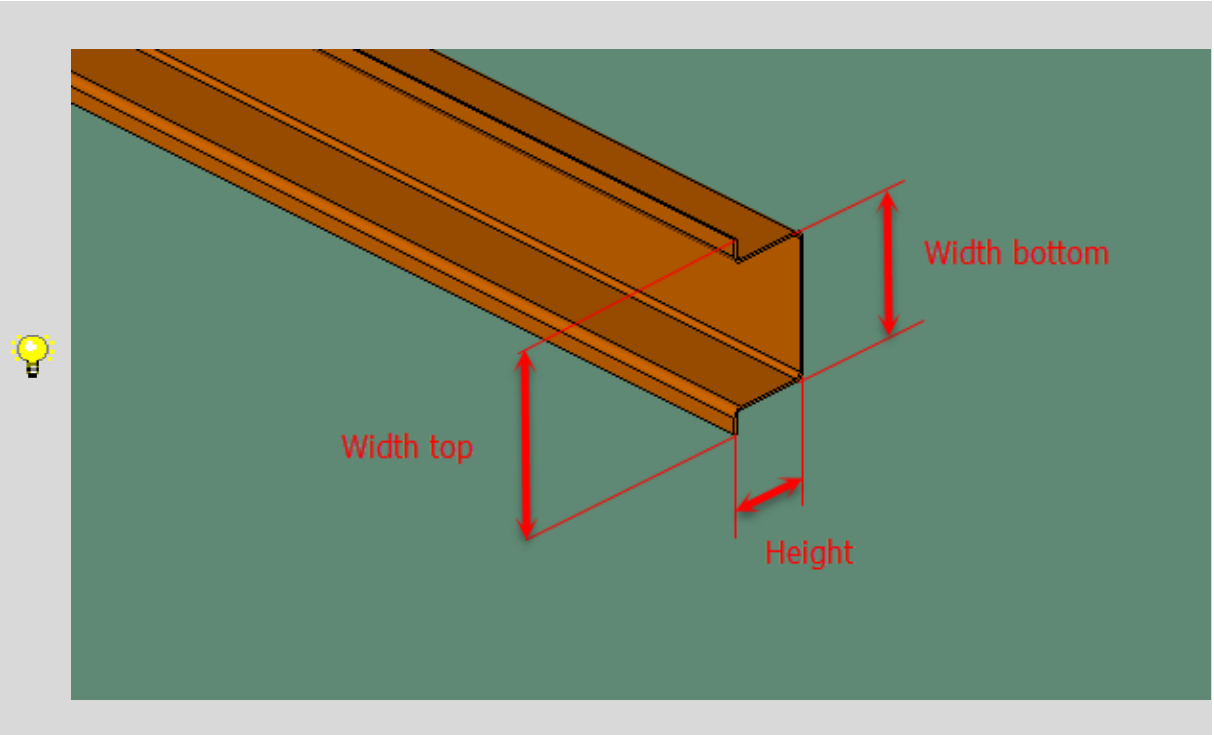

Delivery length <22058>

This property must be filled only if the item is a length-variable item. Pay attention to the chapter "General definitions > Length-variable items".

This property is not available for 'Mounting chassis', 'Punched rail' and 'Support rails' product subgroups.

Specific data fields for Busbars

Pay attention to the main definitions in the chapter "Record type: Part".

Tab: Function definition

Function definition

Select the correct function definition from the 'Current distribution' function category for the corresponding product subgroup.

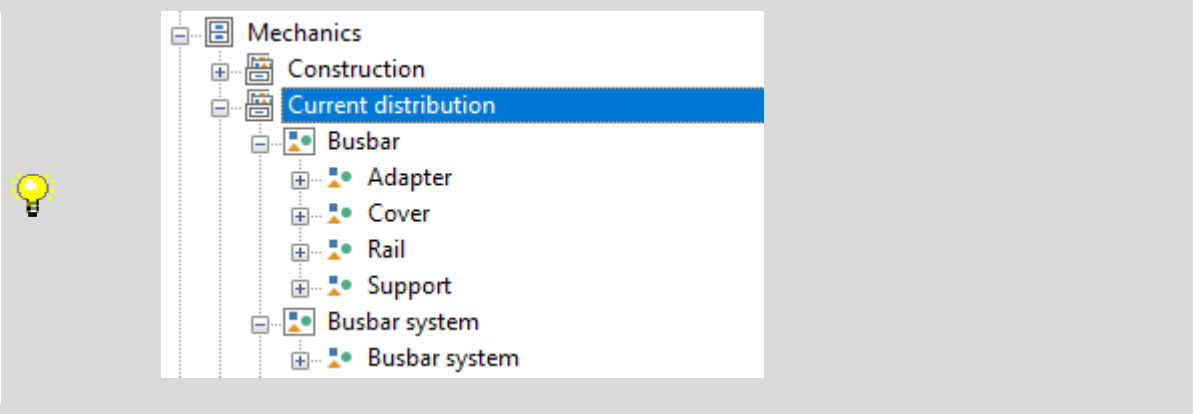

Tab: Properties: Delivery length

Delivery length <22058>

This property must be filled only if the item is a length-variable item. Pay attention to the chapter "General definitions > Length-variable items".

This property is only available for 'Busbar cover' and 'Rail' product subgroups.

Tab: Properties: Busbar

These properties are only available for the Rail product subgroup and required for the calculation of the busbar power dissipation in Watt [W]. Detailed information can be found in the following help page.

EPLAN Help > EPLAN Pro Panel > Thermal Design of Switch Gears > Basics > Calculation of the Total Power Dissipation of Switch Gears: Principle

Rail cross-section <22271>

Enter the cross-section of the busbar rail.

Rail material <22272>

Select one of the current three options (copper / aluminum / other material) from the selection list. If you select 'Copper Cu-ETP CW004A' or 'Aluminum, EN AW-1350A' value, the following two properties will be filled automatically with predefined values from software.

Conductivity (at +20 °C) <22273>

Enter the Specific electrical conductivity of the busbar at +20 °C in [MS/m] (= MegaSiemens per meter).

Temperature coefficient <22274>

Enter the Temperature coefficient of the busbar in [1/K] (= per Kelvin). The temperature coefficient applies for a temperature of 20 °C.

Tab: Properties: Busbar system

The following properties are only available for the Rail product subgroups.

Busbars: Part number <22252>

Optional.

Busbars: Part variant <22253>

Optional.

Busbars: Profile geometry D x H (only EPLAN Cabinet) <22200>

This property must not be filled.

Busbars: Number of rails <22201>

Optional.

Busbars: Rail spacing <22202>

Optional.

Busbars: Distance between rails and mounting panel <22203>

Optional.

Busbar support: Part number <22204>

Optional.

Busbar support: Part variant <22205>

Optional.

Busbar support: Vertical offset <22207>

Optional.

Tab: Mounting rails

The following properties are only available for the System product subgroups.

X Position

Optional.

Y Position

Optional.

Z Position

Optional.

Part number

Optional.

Variant

Optional.

Length

Optional.